Kawasaki
Powering your potential

Precision Machinery Company

Swash-plate Axial Piston Pump for Speed Control

K3VR/K3VL Eco Servo Series

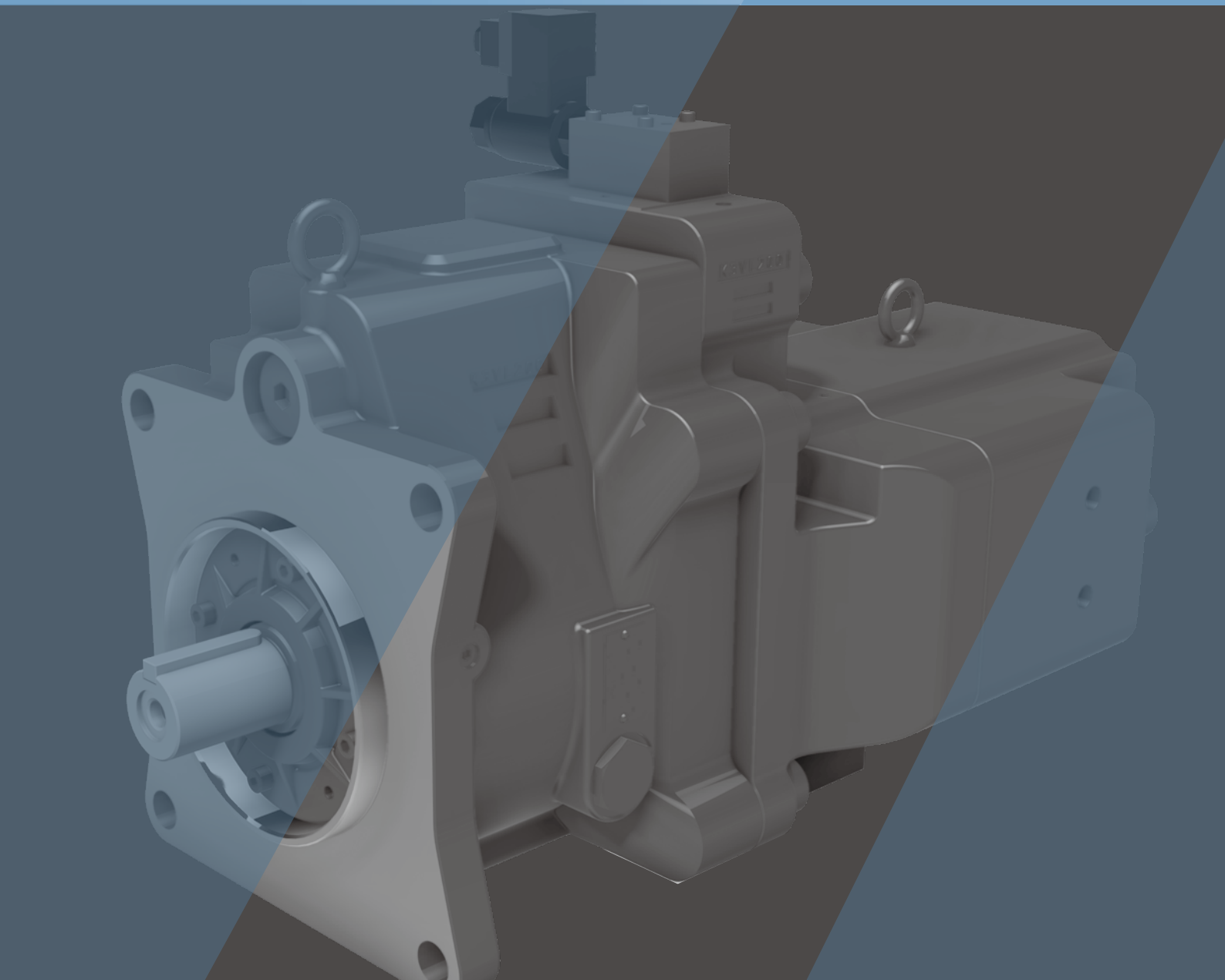

CONTENTS

Applications/Product Usage

The following must be taken into consideration before use.

1. The operating condition of the products shown in this catalog varies depending upon each application. Therefore, the product suitability must be judged by the designer of the hydraulic system and/ or the person who finalizes the technical specifications of the machine after analysis and testing. The product specification shall be determined based on the latest catalog and technical documents. The system must be designed taking into account the possibility of machine failure to ensure that all safety, warning, and application requirements are met.

2. For the proper use of the products, descriptions given in the SAFETY PRECAUTIONS must be observed.

3. The technical information in this catalog represents typical characteristics and performance of the products as of the published date.

4. If the intended use of the products is included in the following, please consult with Kawasaki in advance.
   (1) Use the product in the operating conditions or environments other than those described in the technical documents.
   (2) Use the product in the nuclear sector, aviation sector, medical sector, and/or food sector.
   (3) Use the product in applications which may cause substantial harm to others and their property, and especially in applications where ensuring safety is a requirement.

5. The information described in this catalog is subject to change without notice. For the latest information, please contact Kawasaki.

Safety Precautions

Before using the product, you MUST read this catalog and MUST fully understand how to use the product. To use the product safely, you MUST carefully read all Warnings and Cautions in this catalog.

1. Cautions related to operation

CAUTION - Use the personal protective equipment to prevent injury when the product is in operation.

CAUTION - Some components are heavy. Handle the product carefully not to hurt your hands and lower back.

CAUTION - Do not step on, hit or drop , or apply strong force to the product, as these actions may cause operation failure, product damage, or oil leakage.

CAUTION - Wipe off any oil on the product or the floor completely, as oil can create slippery conditions that may cause drop of the product and personal injury.

2. Warnings and cautions related to installation and removal of the product

CAUTION - Installation, removal, piping, and wiring must be done by a qualified technician.

WARNING - Make sure that the hydraulic power unit is turned off and that the electric motor or engine has completely stopped before starting installation or removal. You must also check that the system pressure has dropped to zero.

WARNING - Make sure that the power source is turned off before installing electric components to reduce the risk of electric shock.

CAUTION - Clean the threads and the mounting surface to prevent damage or oil leakage. Inadequate cleaning may cause insufficient torque and broken seals.

CAUTION - Use the designated bolts and fasten them with prescribed torque when installing the product. Use of undesignated bolts, and excessive or insufficient tightening torque may induce operation failure, damage, or oil leakage.

3. Warnings and cautions for operation

DANGER - Always equip the product with explosion or ignition protection if it is used in potentially explosive or combustible atmospheres.

WARNING - Shield rotary parts, such as the motor and pump shaft, to avoid injury.

WARNING - Stop operation immediately, and take proper measures when the abnormality such as unusual noise, oil leakage, and smoke is found. Continuing operation under such condition may bring about damage, a fire hazard, or injury.

CAUTION - Make sure that all pipes, hoses, and connecting points with pipes or hoses, are correctly connected and tightened before starting operation.

CAUTION - Use the product under the operating conditions and limitations described in the catalog, drawings, and specification sheets.

CAUTION - Do not touch the product in operation. to reduce the risk of skin burn.

CAUTION - Use the proper hydraulic oil and maintain the filtration at the recommended level to prevent premature wear and damage.

4. Cautions related to maintenance

CAUTION - Never modify the product without approval from Kawasaki.

CAUTION - Disassembly of the product may void the warranty.

CAUTION - Keep the product clean and dry when storing or transporting.

CAUTION - The seals may need to be replaced if the product has been stored for an extended period of time.

WARNING - Making adjustments of this product will result in the warranty being null and void.

Handling Precautions

1. Operating Fluid and Temperature Range

1) Operating Fluid

Values shown in this catalog are based upon using mineral oil based anti-wear hydraulic fluid. To ensure optimal performance use of mineral oil based anti-wear hydraulic fluid is recommended.

2) Viscosity and temperature range

To minimize both oil and seal deterioration, a maximum operating temperature of 60°C should be considered. Please note that the regulator may become slow to respond when operating at low temperatures (below 20°C) in extreme cold environments. At such low temperature it is strongly suggested that a warm up cycle is introduced until an operating temperature of 20°C is achieved.

	Normal operating range	Allowable range
Viscosity [mm^2/s(cSt)]	10 to 200	10 to 1,000
Fluid temperature [°C (°F)]	-20 to +95 (-4 to +203)	

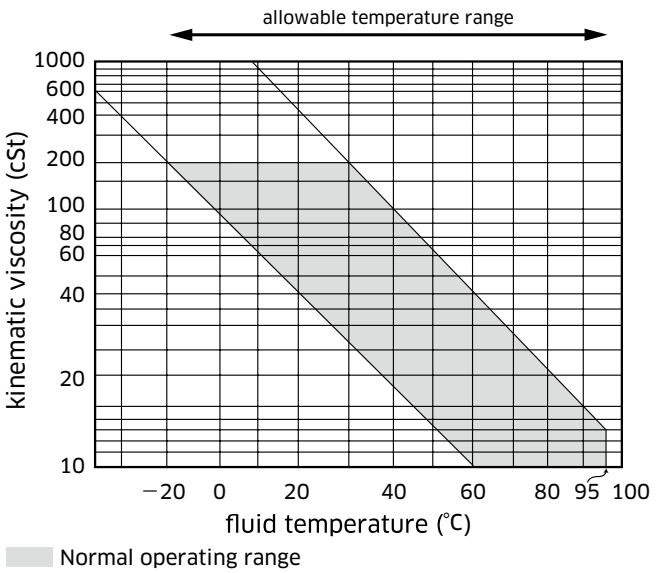

2. Filtration and Contamination Control

1) Filtration of working oil

The most important means to prevent premature damage to the pump and associated equipment and to extend its working life, is to ensure that hydraulic fluid contamination control of the system is working effectively.

This begins by ensuring that at the time of installation that all piping, tanks etc. are rigorously cleaned in a sanitary way. Flushing should be provided using an off line filtration system and after flushing the filter elements should be replaced.

A full flow return line filter of 10 micron nominal should be utilised to prevent contaminant ingress from the external environment, a 5 to 10 micron filter with the tank's breather is also recommended.

2) Suggested acceptable contamination level

The relationship between contamination level and pump life is very difficult to predict as it depends on the type and nature of the contaminant present in the system. Sand or Silica in particular, due to its abrasive nature, does significantly reduce the expected life of a pump. Based on the precondition that there is no significant presence of Silica type substances then a minimum Cleanliness level of -/18/15 ISO 4406 or SAE AS 4059E Table 1 Class 9 (NAS 1638 Class 9).

3. Drive Shaft Coupling

Alignment between the prime mover and the pump shaft should be within 0.05 mm TIR*. In case the pump is directly coupled to the engine flywheel, use a flexible coupling.

*TIR = Total Indicator Reading

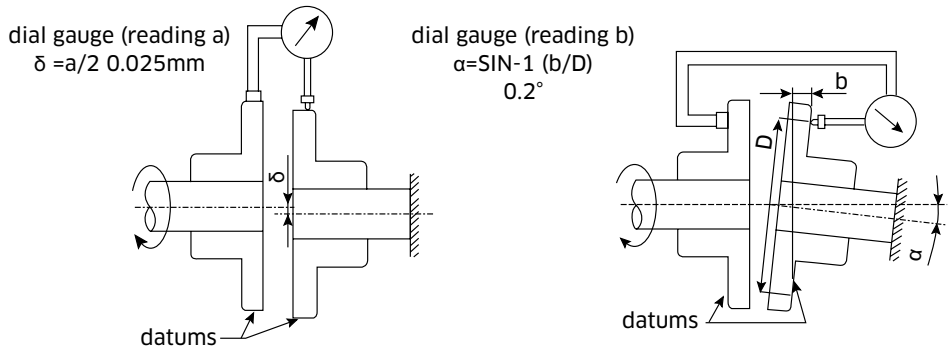

4. Oil Filling and Air Bleeding

1) Pump case filling

Be sure to fill the pump casing with oil through the drain port, filling only the suction line with oil is totally in-sufficient. The pump contains bearings and high-speed sliding parts including pistons with shoes and a spherical bush that need to be continuously lubricated. Part seizure or total premature failure will occur very quickly if this procedure is not rIgidly followed.

2) Air bleeding

Run the pump unloaded for a period to ensure that all residual air within the system is released.

3) Long term out of usage

It is undesirable to leave the pump out of use for a long period e.g. a year or more. In such a situation it is recommended that the pump is run for a short period on a more frequent basis even if it is just unloaded. With regard to a pump held in storage then rotating the shaft on a frequent basis is sufficient. If the pump is left out for more than the suggested time it will require a service inspection.

5. Drain Piping

1) Installation of drain line

It is the preferred option to mount the pump with the case drain piping initially rising above the pump before continuing to the tank. Do not connect the drain line to the inlet line.

The external drain must be higher than the uppermost part of the pump casing.

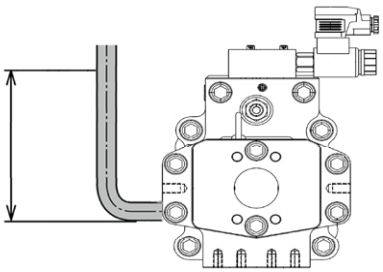

Cautions

The oil in the pump case must be refilled when the pump has not been operated for one month or longer.

The uppermost drain port should be used and the drain piping must be larger in size than the drain port to minimise pressure in the pump case. The pump case pressure must not exceed 1 bar as shown in the illustration below. (Peak pressure must never exceed 4 bar.)

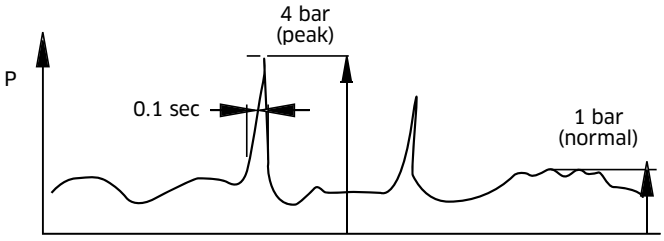

2) Size of drain hose or drain pipe

The internal bore size of the drain hose or drain pipe must be larger than that of the drain port. Arrange the drain line as short as possible.

6. Mounting the Pump Above the Tank

Do not mount the speed control pump above a tank.
The oil level in the tank should be upper than the uppermost part of the pump casing.

7. Shaft Loading and Bearing Life

Although Eco Servo Series pumps are equipped with bearings that can accept some external thrust and radial forces, application of such loads will affect bearing life. Depending on the load magnitude , the load position, and the load orientation, bearing life may be significantly reduced.

Conversion Factors, Formula and Definition

Conversion Factors

	Formula	Note
Displacement	1 cm^3 = 0.061 in^3	
Pressure	1 MPa = 145 psi	
Flow	1 L/min = 0.264 gpm	US gallon
Torque	1 Nm = 0.74 lbf ft	
Power	1 kW = 1.341 hp	
Weight	1 kg = 2.205 lb	

Formula

	Metric system		Imperial system	
Output flow	$Q = q \times N \times \eta_v / 1000$	L/min	$Q = q \times N \times \eta_v / 231$	gal/min
Input torque	$T = q \times \Delta P / 2\Pi / \eta_m$	Nm	$T = q \times \Delta P / 24\Pi / \eta_m$	lbf ft
Input power	$L = T \times N / 9550 = Q \times \Delta P / 60 / \eta_t$	kW	$L = T \times N / 5252 = Q \times \Delta P / 1714 / \eta_t$	hp

Eco Servo Series

Swash-plate Axial Piston Pump

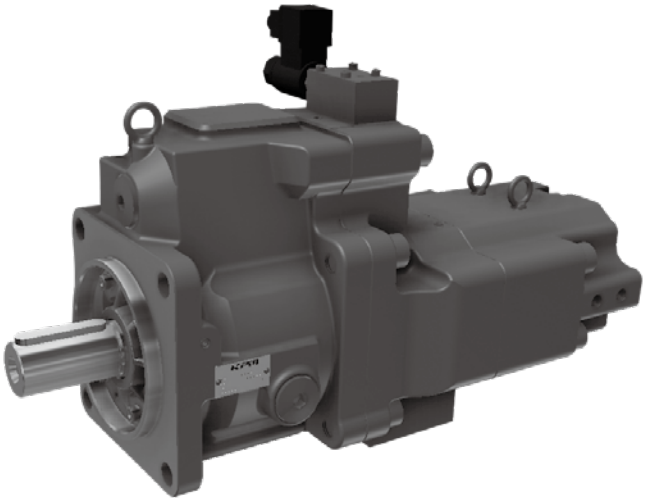

■ General Descriptions

The K3VR/K3VL Eco Servo series Swash Plate Type Axial Piston Pumps are designed to satisfy the industrial market where a medium/high pressure variable displacement pump for speed control is required.

■ Features

For motor speed control
When combined with the servo motor, it achieves high precision operation in the whole rotation speed range.

Variable capacity
The large/small displacements can be switched by the electric signal. This enables smaller driving torque at high pressure.

Built-in suction valve (K3VR)
The built-in large capacity suction valve enables easy configuration of the closed circuit for various systems.

Low pulsation and low noise
Low pulsation and low noise operation is possible by utilising the features of the piston pump that can operate even at low speed.

Wide line-up
For open/closed circuits, wide flow rate range/wide power range.

1 Ordering Code

1-1 Pump Options - Closed Circuit

1	2	3		4	5	6	7	8		9	10	11
K3VR	**200**	**P**	**-**	**1**	**M**	**K**	**M**	L	-	024D	0	(Blank)

– NOT AVAILABLE ● AVAILABLE

1. K3VR Series Pump - Closed Circuit

K3VR Series, Variable Displacement, Axial Piston

2. Pump Size

		22	45	80	140	200
Maximum Displacement	cm^3/rev	22.0	45.0	80.0	140.0	200.0

3. Hydraulic Fluid Type

		22	45	80	140	200
P	Polyol ester & Mineral oil	●	●	●	●	●
W	Water Glycol (Nitrile Seal & Nitrile Shaft Seal)	●	●	●	●	●

4. Interface of suction valve

		22	45	80	140	200
1	With suction valve	●	●	●	●	●
0	Without suction valve	●	●	●	●	●

5. Direction of Rotation

		22	45	80	140	200
M	Bi-directional	●	●	●	●	●

6. Mounting Flange & Shaft

		22	45	80	140	200
K	SAE keyed with SAE mounting, Auxiliary port (drain, air bleeder) : UNF thread	●	●	●	●	●
J	ISO (JIS) keyed with SAE mounting, Auxiliary port (drain, air bleeder) : G thread	●	●	●	●	●

7. Porting Thread Type

		22	45	80	140	200
M	Metric Thread	●	●	●	●	●
S	UNF Thread	●	●	●	●	●

1-1 Pump Options - Closed Circuit (cont)

1	2	3		4	5	6	7	**8**		**9**	**10**	**11**
K3VR	200	P	-	1	M	K	M	**L**	**-**	**024D**	**0**	**(Blank)**

		22	45	80	140	200
8. Minimum displacement (cm³/rev)						
0	Fixed displacement stopper	-	30	25	70	-
1	Fixed displacement stopper	-	17	22	60	30
2	Fixed displacement stopper	-	11	20	35	50
3	Fixed displacement stopper	-	25	18	78	80
4	Fixed displacement stopper	-	8	10	50	70
5	Fixed displacement stopper	-	4.5	15	27.5	100
6	Fixed displacement stopper	-	-	40	20	90
7	Fixed displacement stopper	-	-	30	55	60
8	Fixed displacement stopper	-	-	-	-	-
9	Fixed displacement stopper	-	-	-	-	-
N	Without 2-position control (without valve block)	●	●	●	●	●
L	Variable Minimum displacement setting (Low set)	●	●	●	●	●
H	Variable Minimum displacement setting (High set)	●	●	●	●	●
9. Control solenoid voltage						
115A	115V AC 50/60Hz DIN43650 plug	●	●	●	●	●
230A	230V AC 50/60Hz DIN43650 plug	●	●	●	●	●
012D	12V DC DIN43650 plug	●	●	●	●	●
024D	24V DC DIN43650 plug	●	●	●	●	●
10. Solenoid type						
0	Minimum displacement at voltage application	●	●	●	●	●
1	Maximum displacement at voltage application	●	●	●	●	●
2	Minimum displacement at voltage application with Psv port	●	●	●	●	●
3	Maximum displacement at voltage application with Psv port	●	●	●	●	●
11. Series No.						
Blank		-	●	●	●	●
-01		●	-	-	-	-

1-2 Pump Options - Open Circuit

1	2	3	4	5	6	7	8	9		10	11		12		13
K3VL	**200**	**/B**	**-**	**1**	**N**	**R**	K	M	-	20	S	-	024D	-	0

– NOT AVAILABLE ◐ NOT AVAILABLE IN COUNTER CLOCK-WISE ● AVAILABLE

1. K3VL Series Pump - Open Circuit

K3VL Series, Variable Displacement, Axial Piston

			45	80	140	200
2. Pump Size						
Maximum Displacement		cm^3/rev	45.0	80.0	140.0	200.0
3. Design Series						
/B	Series		●	●	●	●
4. Hydraulic Fluid Type						
-	Mineral oil, Nitrile seal + Viton shaft seal		●	●	●	●
5. Circuit Type						
1	Open Circuit		●	●	●	●
6. Auxiliary pump mounting interface						
0	Without auxiliary pump		◐	◐	◐	◐
A	SAE-A		●	●	●	●
B	SAE-B		●	●	●	●
C	SAE-C		-	●	●	●
D	SAE-D		-	-	●	●
E	SAE-E		-	-	-	●
N	With steel cover (auxiliary pump attachable)		●	●	●	●
R	Rear port type (auxiliary pump unattachable)		●	●	●	●
7. Direction of Rotation						
R	Clockwise Rotation		●	●	●	●
L	Counter Clockwise Rotation		●	●	●	●

1-2 Pump Options - Open Circuit (cont)

1	2	3	4	5	6	7	**8**	**9**		**10**	**11**		**12**		**13**
K3VL	200	/B	-	1	N	R	**K**	**M**	**-**	**20**	**S**	**-**	**024D**	**-**	**0**

8. Mounting Flange & Shaft

		45	80	140	200
K	SAE keyed with SAE mounting, Auxiliary port (drain, air bleeder) : UNF thread	●	●	●	●
J	ISO (JIS) keyed with SAE mounting, Auxiliary port (drain) : G thread, (air bleeder) : UNF thread	●	●	●	-

9. Porting Thread Type

M	Metric Thread	●	●	●	●
S	UNF Thread	●	●	●	●

10. Minimum displacement (cm³/rev)

1st digit code	**0**	Fixed displacement stopper	30	25	70	-
	1	Fixed displacement stopper	17	22	60	30
	2	Fixed displacement stopper	11	20	35	50
	3	Fixed displacement stopper	25	18	78	80
	4	Fixed displacement stopper	8	10	50	70
	5	Fixed displacement stopper	4.5	15	27.5	100
	6	Fixed displacement stopper	-	40	20	90
	7	Fixed displacement stopper	-	30	55	60
	8	Fixed displacement stopper	-	-	-	-
	9	Fixed displacement stopper	-	-	-	-
2nd digit code	**0**	With 2-position control	●	●	●	●
	1	Without 2-position control	●	●	●	●

11. Design Code

S	Valve plate for exclusive use	●	●	●	●

12. Control solenoid voltage

115A	115V AC 50/60Hz DIN43650 plug	●	●	●	●
230A	230V AC 50/60Hz DIN43650 plug	●	●	●	●
012D	12V DC DIN43650 plug	●	●	●	●
024D	24V DC DIN43650 plug	●	●	●	●

13. Solenoid type

0	Minimum displacement at voltage application	●	●	●	●
1	Maximum displacement at voltage application	●	●	●	●
2	Minimum displacement at voltage application with Psv port	●	●	●	●
3	Maximum displacement at voltage application with Psv port	●	●	●	●

2 Technical Information

2-1 Specifications

Closed Circuit							
Pump Model			K3VR22	K3VR45	K3VR80	K3VR140	K3VR200
Displacement		cc/rev	22	45	80	140	200
Pressure ratings	Rated	bar	320				
	Peak	bar	350				
Speed ratings	Max. for self priming *1	rpm	1,500	1,500	1,500	1,500	1,500
	Max. *2	rpm	1,800	1,800	1,800	1,800	1,800
Case drain pressure	Rated	bar	1				
	Peak	bar	4				
Weight *3		kg	30	46	48	91	201
Amount of oil in casing		cm^3	500	800	1,300	2,200	4,400
Fluid Type	Type *4		Anti-wear type mineral hydraulic fluid				
	Temperature range		-20°C to +95°C				
	Viscosity range *5		10 cSt to 1,000 cSt				
	Cleanness		-/18/15(ISO 4406) or class9(NAS 1638)				
	Filtration	Suction line	150-mesh				
		Return line	Nominal 10 μm				

Open Circuit						
Pump Model			K3VL45	K3VL80	K3VL140	K3VL200
Displacement		cc/rev	45	80	140	200
Pressure ratings	Rated	bar	320			
	Peak	bar	350			
Speed ratings	Max. for self priming *1	rpm	2,700	2,400	2,200	1,900
	Max. *2	rpm	3,250	3,000	2,500	2,200
Case drain pressure	Rated	bar	1			
	Peak	bar	4			
Weight *3		kg	25	35	65	95
Amount of oil in casing		cm^3	600	800	1,500	2,000
Allowable input torque		Nm	225	400	710	1,000
Fluid Type	Type *4		Anti-wear type mineral hydraulic fluid			
	Temperature range		-20°C to +95°C			
	Viscosity range *5		10 cSt to 1,000 cSt			
	Cleanness		-/18/15(ISO 4406) or class9(NAS 1638)			
	Filtration	Suction line	150-mesh			
		Return line	Nominal 10 μm			

*1 : Suction pressure should be kept at 0MPa (0bar) and above at suction flange port (steady state). (Maximum speed is limited when the suction pressure is less than 0MPa (0bar). Consult us for details.)

*2 : Boost pressure should be kept at 1 bar and above.

*3 : Dry condition, with standard regulator, and without auxiliary pump.

*4 : Consult us for use with other kinds of working fluid.

*5: For viscosity of 200 cSt to 1000cSt, warming up operation is necessary before full-scale operation.

2-1 Specifications (cont)

Notes:

Rated Pressure
Pressure at which life and durability will not be affected.

Peak Pressure
The instant allowable surge pressure as defined by BS ISO 2944:2000. Life and durability however will be shortened.

Maximum Self Priming Speed
Values are valid for an absolute suction pressure of 1 bar. If the flow is reduced and the inlet pressure is increased the speed may also be increased.

Maximum Boosted Speed
Values stated are the absolute maximum permitted speed for which an increased inlet pressure will be required.

Weight
Approximate dry weights, dependant on exact pump type.

Hydraulic Fluid
Mineral anti wear hydraulic fluid - for other fluid types please consult KPM.

Viscosity Range
If viscosity is in range 200 to 1,000 cSt, then warming up is necessary before commencing full scale running.

2-2 Technical Data

Working Fluid Types

Anti-Wear Type Hydraulic fluid

It is generally recommended to use an anti-wear hydraulic fluid like mineral oil when the operating pressure exceeds 206 bar.

Fire-resistant Fluids

Some kind of fire-resistant fluids require special materials for seals, paint and metal finishing. Please consult KPM and provide details of the particular fluid specification and the working conditions so that any special requirements can be ascertained.

In general, fire-resistant fluids have a low viscosity index and their viscosity also changes significantly with operating temperature and service life. For this reason, the circuit should be provided with an adequately sized cooler or forced cooling so that temperatures can be stabilised. Due to the inherent water content of some of these fluids the minimum allowable suction pressure will be higher than that of an equivalent mineral oil and so needs to be fully evaluated by KPM. The following table provides an overview of the precautions and characteristics that can be expected with these types of fluids.

Fluid Type / Parameter	Mineral Oil
Maximum Pressure (bar)	320
Recommended Temperature Range (deg C)	20 - 60
Cavitation susceptability	◯
Expected life expectancy compared to mineral oil	100%

◯ recommended

Pump Start Up Precautions

Piping & Circuit Checking

Check to see that the piping and full hydraulic circuit is completed and that any gate valves etc. are open.

Direction of Rotation

Check to ensure that direction of rotation is correct and that the inlet and delivery lines are connected correctly.

Start Up

Jog start the motor and check once more for correct rotation. Run the pump unloaded for a period to ensure that all residual air within the system is released. Check for external leakage, abnormal noise and vibrations.

Precautions on acceleration and deceleration of servo-motor and its maximum speed:

- Make time setting of acceleration and deceleration (0 <=> ± 1500min^{-1}) of the servo motor to 100ms and above.
- The maximum speed is 1800min^{-1}, but in case of is exceeding 1500min^{-1}, designing must be so made that boost pressure of about 0.2MPa may occur in the suction valve circuit (refilling port) or at the suction port, utilising the boost circuit, tank head pressure.

End of Life

The pump unit, hydraulic fluid and packaging must be disposed of carefully to avoid pollution to the environment. The pump unit must be completely empty upon disposal, it must be disposed of according to national regulations and you must also follow safety information for disposal of the hydraulic fluid.

All individual parts of the pump unit must be recycled. Separate the pump unit parts according to: cast parts, steel, aluminium, non-ferrous metal, electronic waste, plastic, and seals.

2-3 Performance Data

Pump Efficiency (%)

K3VR45/K3VL45

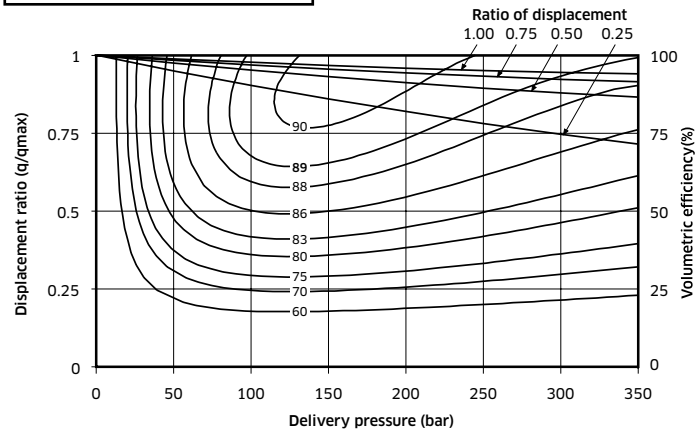

Self Priming Capability

K3VR45

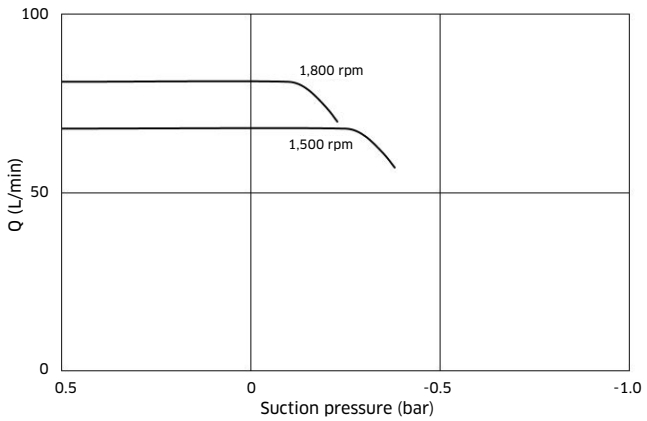

K3VL45

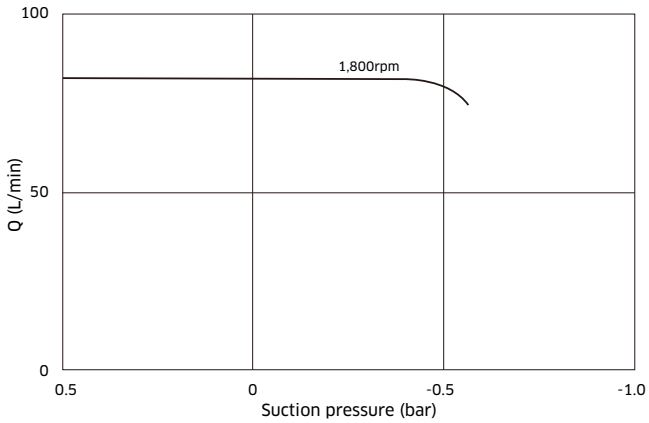

2-3 Performance Data (cont)

Pump Efficiency (%)

K3VR80/K3VL80

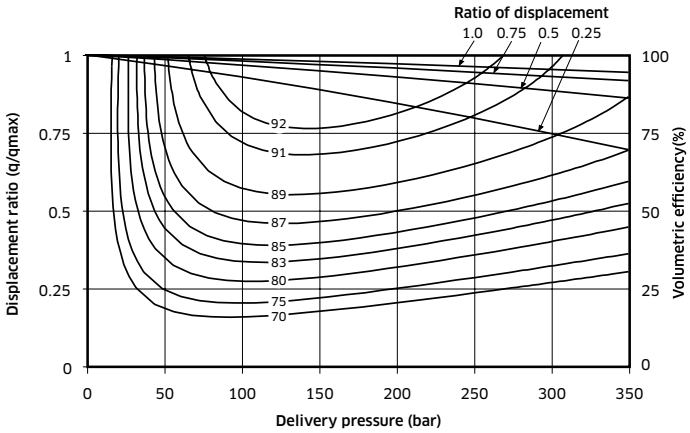

Self Priming Capability

K3VR80

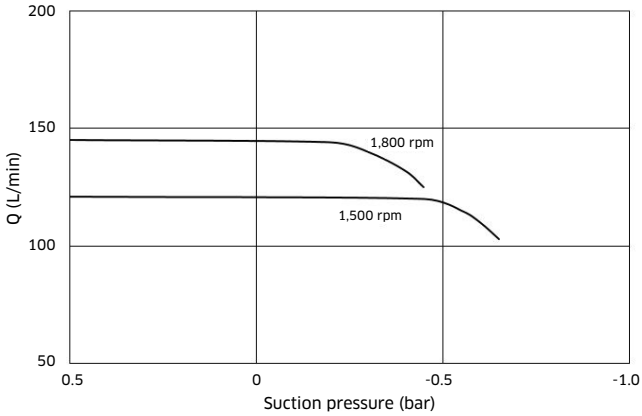

K3VL80

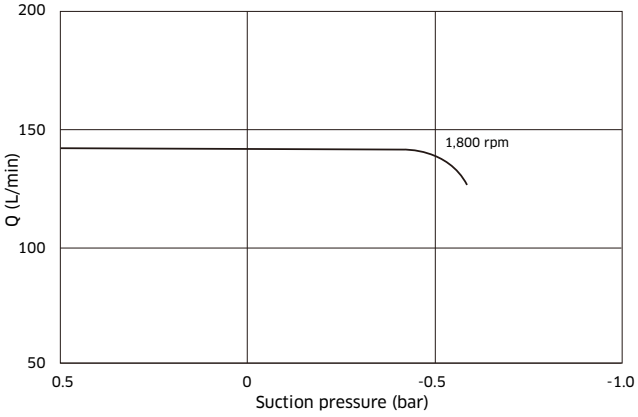

2-3 Performance Data (cont)

Pump Efficiency (%)

K3VR140/K3VL140

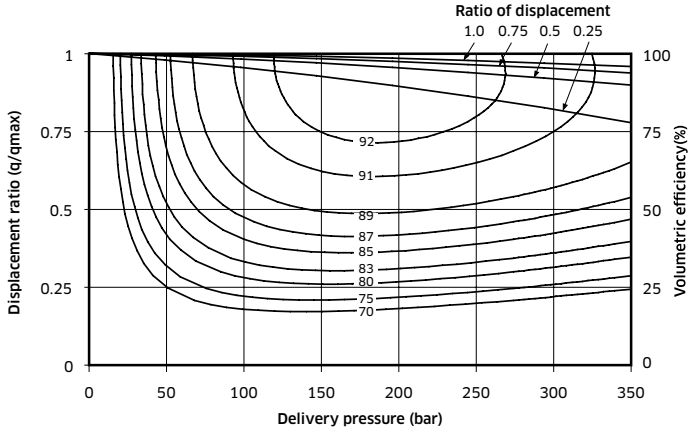

Self Priming Capability

K3VR140

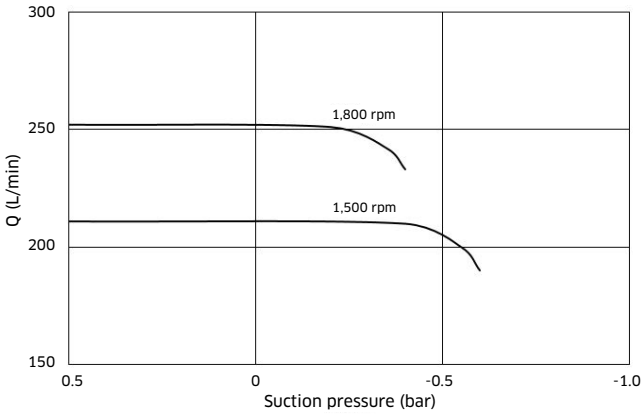

K3VL140

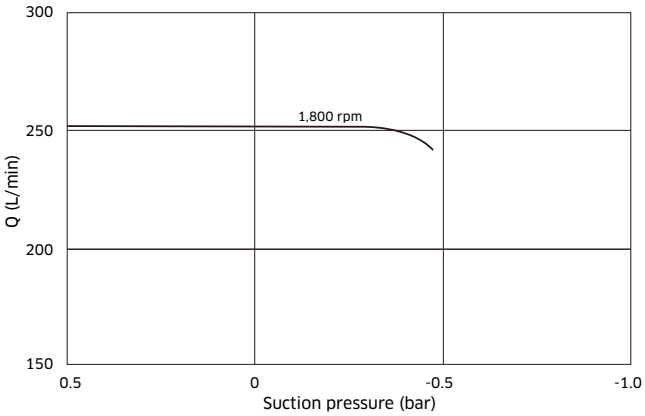

2-3 Performance Data (cont)

Pump Efficiency (%)

K3VR200/K3VL200

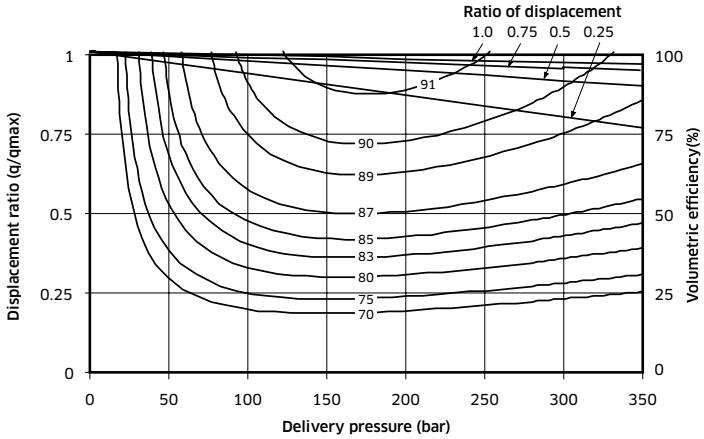

Self Priming Capability

K3VR200

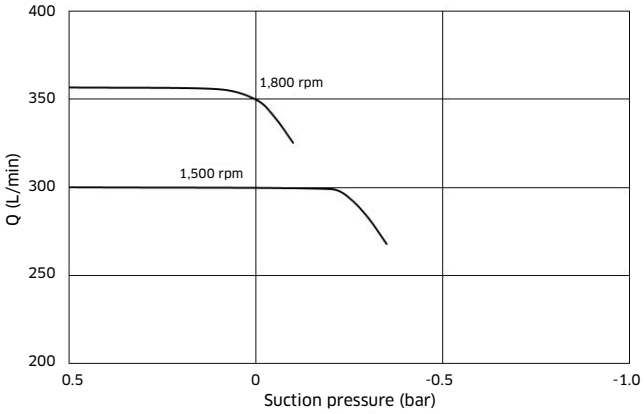

K3VL200

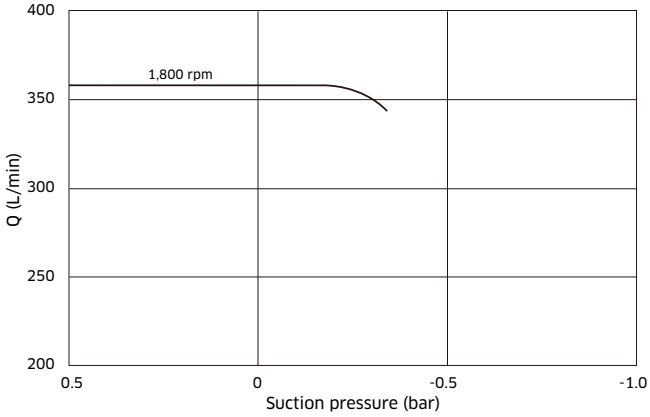

2-4 Radial Loading Capacity

No axial shaft loading possible, radial loading is achievable but in specific orientation:-

Radial shaft loading can be allowed provided that its orientation is such that the front bearing takes the additional load (see diagram below).

Note: In this case bearing life will be reduced.

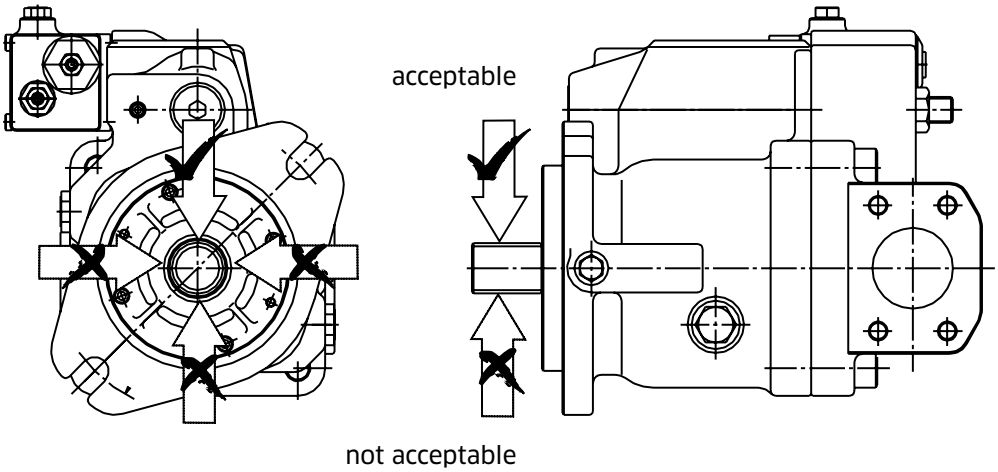

2-5 Functional Description of Regulator

Closed Circuit

Regulator Code	Control Curves	Hydraulic Circuit
2-position control Electric command signal of the solenoid valve switches between the two (maximum or minimum) pump discharge displacement. This enables lower torque at high pressure. Note: Two solenoid options. Minimum or Maximum displacement with electrical signal.	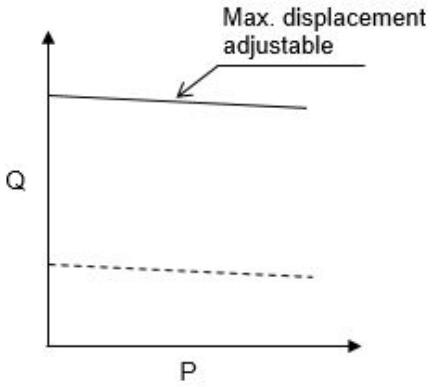	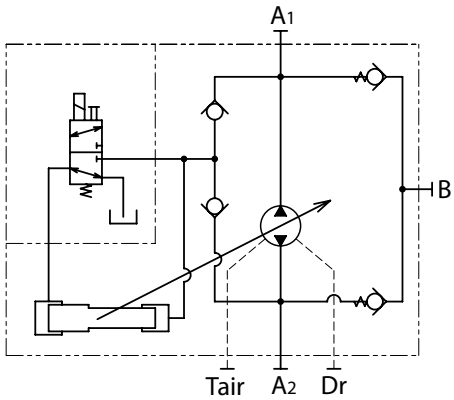

Open Circuit

Regulator Code	Control Curves	Hydraulic Circuit
2-position control Electric command signal of the solenoid valve switches between the two (maximum or minimum) pump discharge displacement. This enables lower torque at high pressure. Note: Two solenoid options. Minimum or Maximum diplacement with electrical signal.	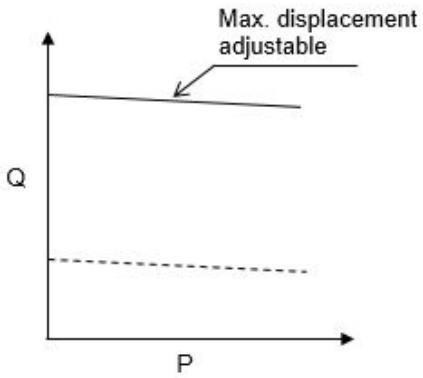	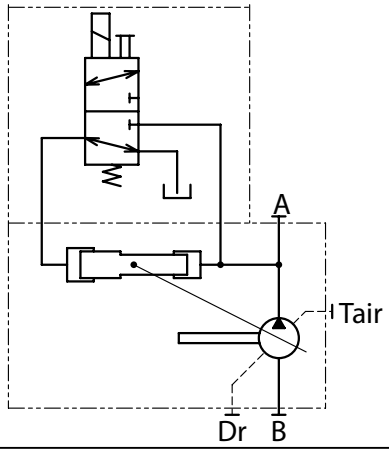

2-6 Installation

Direction of Installation

Install the pump with the drive shaft horizontal as a rule.
Precautions for vertical installtion (with the shaft end upward) are the following:

1) Confirm the oil level in the tank to be higher than the pump mounting flange.
2) If the oil level is lower than the pump mounting flange, or can be lower below the flange face caused by the fluctuation of the tank oil level, supply oil into the pump casing through the air bleeder port.
3) When installing the pump outside the tank, piping of both drain port and air bleeder port should be connected to the oil tank. If the piping for draining or air bleeding is above the oil level, fill the casing, drain piping, and air bleed piping with oil before starting the pump (refer to fig.[B] and [C] below).

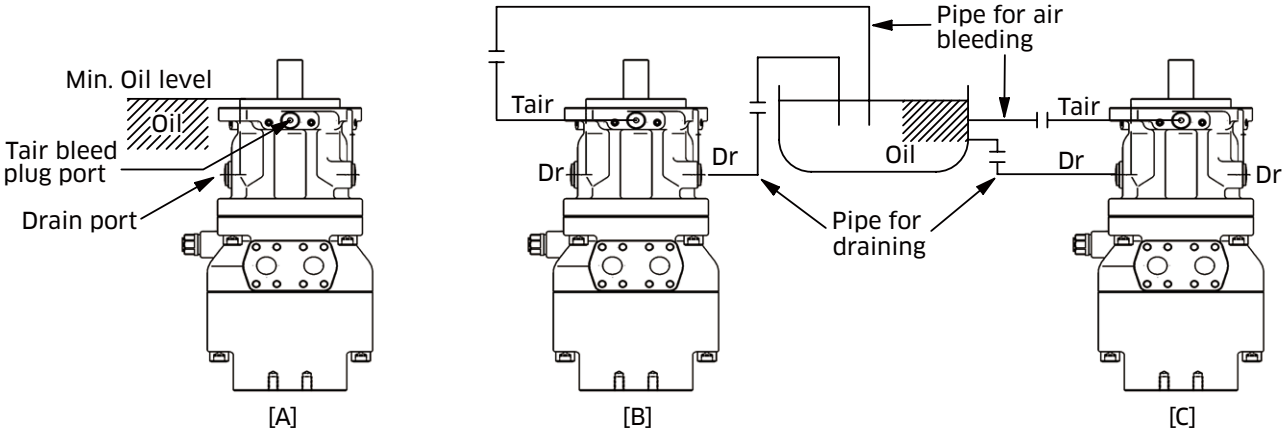

External load to shaft end

Apply neither radial nor thrust external load to the shaft end of the pump as a rule. If there is possibility of such load being applied through any of belts, gears or the like, consult us about the specifications.

Removal of rust preventive coating

Since rust preventive coating is applied to the shaft end in advance, remove it with detergent liquid before use. When using detergent liquid, take care so that detergent liquid does not splash on the oil seal portion.

Fit dimensions of the drive shaft and the coupling

Connect the coupling with the drive shaft by interference-fit, using the screw threads prvided on the shaft end. Do not tap the coupling or the shaft end for fitting. In pulling out the coupling as well, use the coupling puller so that internal bearings can be prevented from receiving impact.

Length of the drive shaft engagement with the coupling

For the shaft dimensions on the coupling end, refer to those shown in the dimensional outline drawing. As to the length of engagement, so to make arrangement the whole parallel portions of the key and the spline engage with the key way and the counterpart spline as far as possible.

2-6 Installation (cont)

Connection and centering for the pump

For connection of the pump drive shaft and the prime mover shaft, use flexible coupling such as a flexible shaft coupling or a chain coupling as a rule (do not use a tire type coupling).

Method of centering and datum:
In connecting the two shafts by means of a coupling, even if the coupling is of a flexible type, align both the shaft centers as precisely as possible, in order to lengthen the life of the shaft coupling and to reduce excessive load to the shafts, bearings, etc.
A typical method of centering is shown in the following figure.
(Couplings are usually provided with datum faces for centering)
As the standard for centering, the following values are recommendable.

Parallel misalignment	δ ≤ 0.025mm (Dial gauge reading: a ≤ 0.05mm)
Angular misalignment	δ ≤ 0.2°

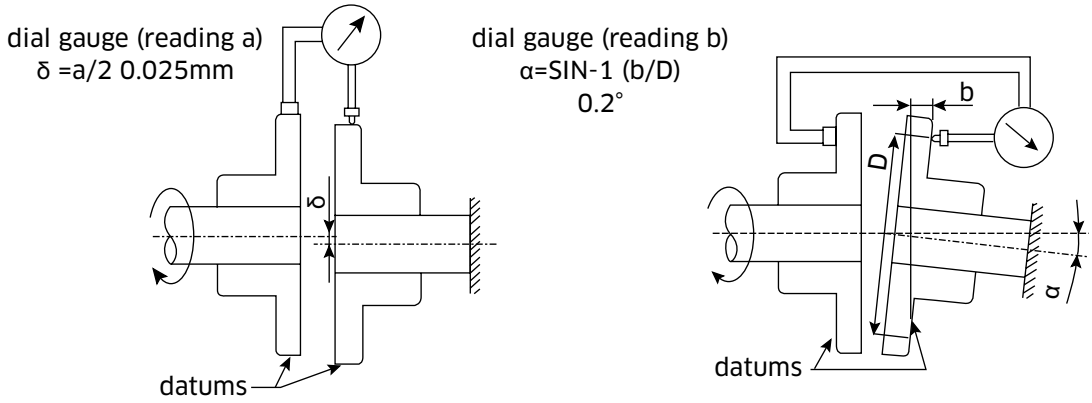

Tightening of pump mounting screw

For pump mounting, use either hexagon screws or hexagon socket head cap screws with recommended tightening torque shown in the following table. Recommended bolt strength class is 10.9 or above to JIS. Be sure to use washers for mounting.

Pump size	22	45	80	140	200
Mounting screw	M12	M12	M16	M16	M20
Tightening torque (Nm)	98	98	235	235	435

2-6 Installation (cont)

Moment of Inertia and Torsional Stiffness

Frame Size	Moment of Inertia		Torsional Stiffness (N·m/rad)
	I (kg.m²)	GD² (kgf.m²)	
K3VR22	2.09×10^{-3}	$8.36\text{-}10^{-3}$	2.20×10^{-4}
K3VR45/K3VL45	3.85×10^{-3}	$1.54\text{-}10^{-2}$	3.59×10^{4}
K3VR80/K3VL80	7.30×10^{-3}	$2.92\text{-}10^{-2}$	4.83×10^{4}
K3VR140/K3VL140	2.02×10^{-2}	$8.06\text{-}10^{-2}$	9.33×10^{4}
K3VR200/K3VL200	4.58×10^{-2}	$1.83\text{-}10^{-1}$	1.54×10^{5}

2-6 Installation (cont)

Displacement Switching Solenoid Valve Specification (Type-0, Type-1)

Minimum operation pump pressure : 10 bar

Electrical Specification : see tables below

	DC Coil with ISO/DIN 43650, From A connector		AC Coil with ISO/DIN 43650, From A connector	
	12V	**24V**	**115V**	**230V**
Maximum Coil Temperature at 68°F (20°C) Ambient	218°F (105°C)		218°F (105°C)	
Arc Suppression	Standard		Standard	
Power Consumption (cold) - at rated voltage	22 watts		22 watts	
Maximum Ambient Temperature	122°F		122°F	
Voltage/Frequency	12VDC	24VDC	115 VAC 50/60 Hz	230 VAC 50/60 Hz
Operating Voltage Range	+/- 10% nominal		+/- 10% nominal	
Duty Cycle Rating	100%		100%	
Connector	ISO/DIN 43650, Form A, 3-pin		ISO/DIN 43650, Form A, 3-pin	
Connector Environment Rating	IP65/IP67		IP65/IP67	
Coil Nut Torque	0.5 Nm		0.5 Nm	

3 Dimensions

3-1 K3VR22 Installation

Closed Circuit

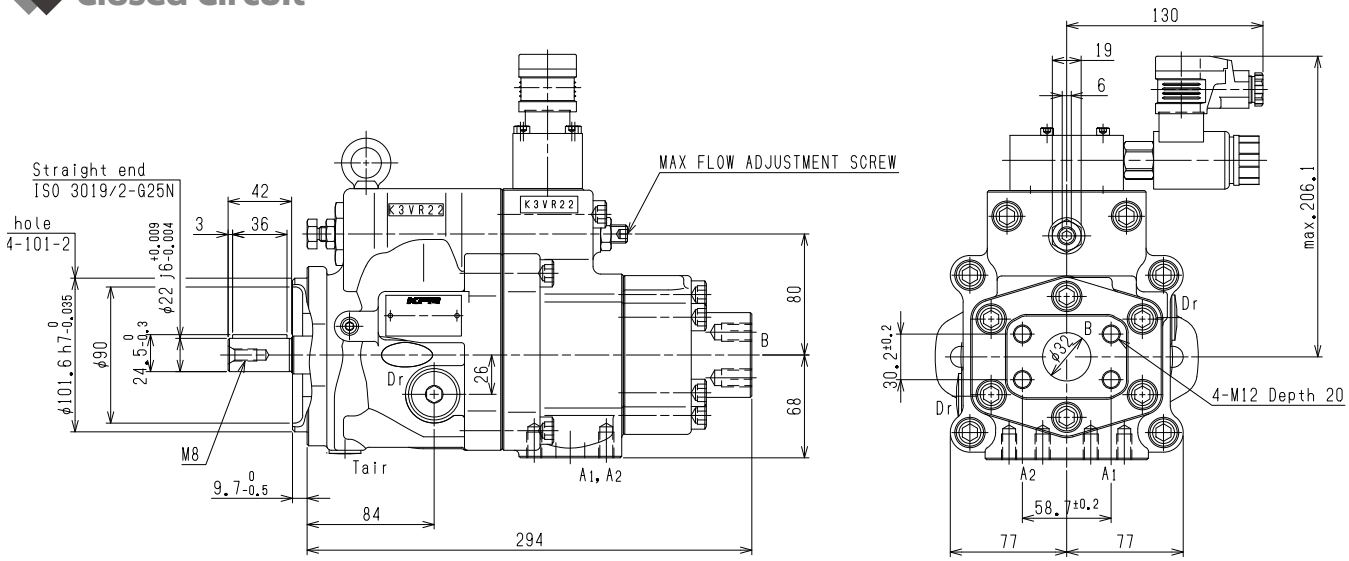

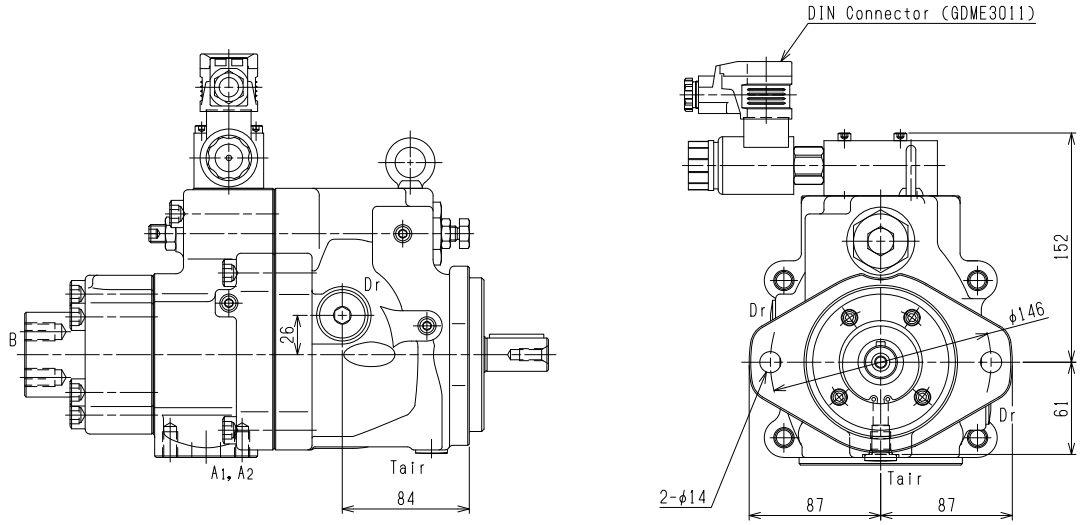

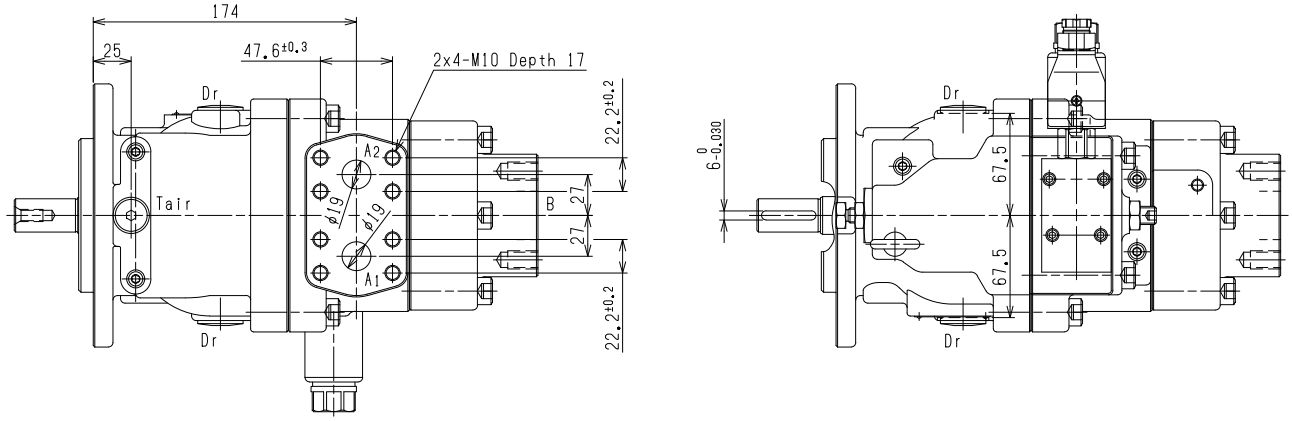

3-1 K3VR22 Installation (cont)

Mounting Flange and Shaft Options

Closed Circuit (K3VR22)

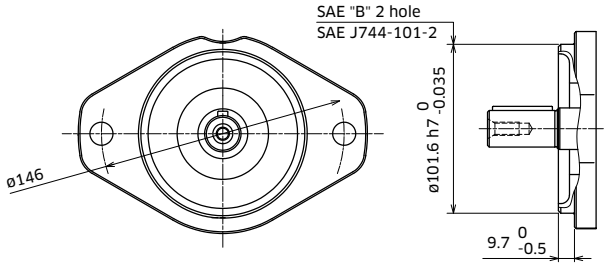

SAE 'B' Straight Shaft - Option 'K'

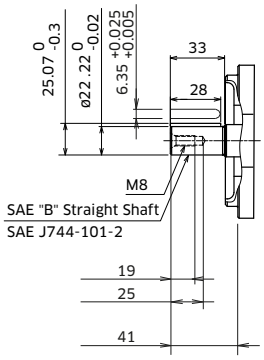

ISO (JIS) Straight Shaft - Option 'J' (with SAE Mount)

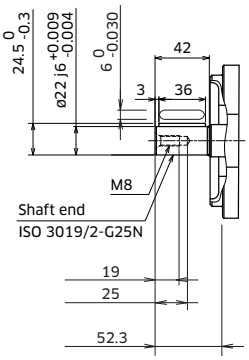

Porting Details

Closed Circuit (K3VR22)

Main SAE Flanged Ports

Des.	Port Name	Port Size	Tightening Torque (Nm)	Flange Threads
UNF Threaded Version ('S' in position 7 of model code)				
A1, A2	Suction, Delivery Port	SAE J518C Std pressure (code 61) ¾"	40	⅜-16UNC-2B x 18 mm
B	Supply Port	SAE J518C Std pressure (code 61) 1¼"	60	7⁄16-14UNC-2B x 24 mm
Metric Threaded Version ('M' in position 7 of model code)				
A1, A2	Suction, Delivery Port	SAE J518C Std pressure (code 61) ¾"	57	M10 x 17
B	Supply Port	SAE J518C Std pressure (code 61) 1¼"	98	M12 x 20

Auxiliary Ports

Des.	Port Name	Port Size	Tightening Torque (Nm)
SAE Version ('K' in position 6 of model Code)			
D_r	Drain Port (x2)	¾ -16UNF -2B -14.3	98
T_{air}	Air Bleeder Port	7⁄16 -20UNF -2B -11.5	12
ISO Version ('J' in position 6 of model code)			
D_r	Drain Port (x2)	G½ -19	110
T_{air}	Air Bleeder Port	G¼ -15	36

3-2 K3VR45/K3VL45 Installation

Closed Circuit (K3VR45)

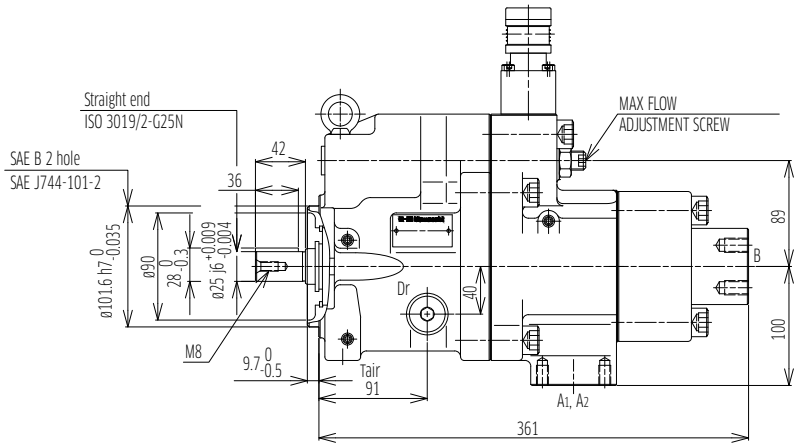

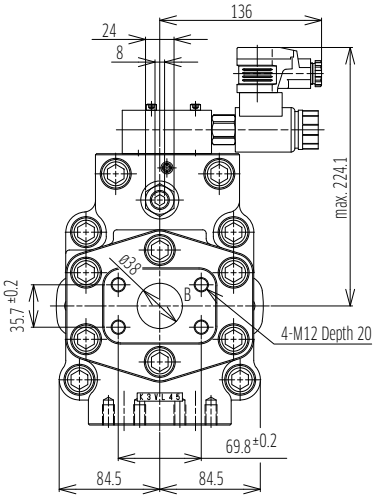

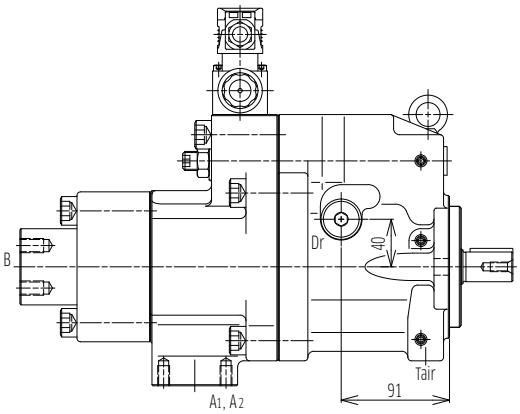

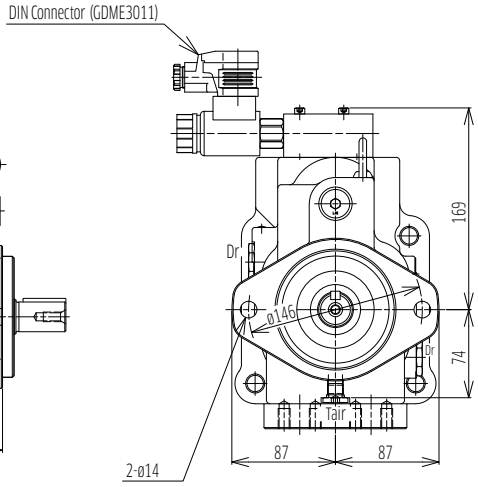

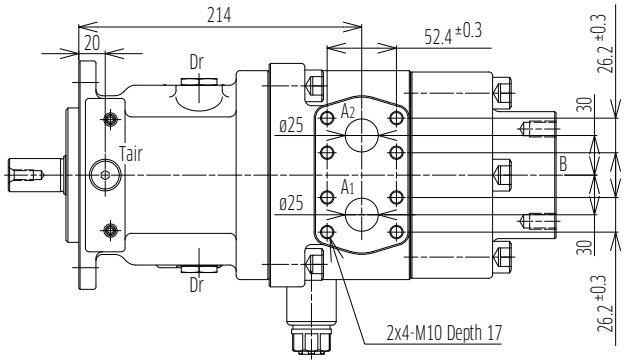

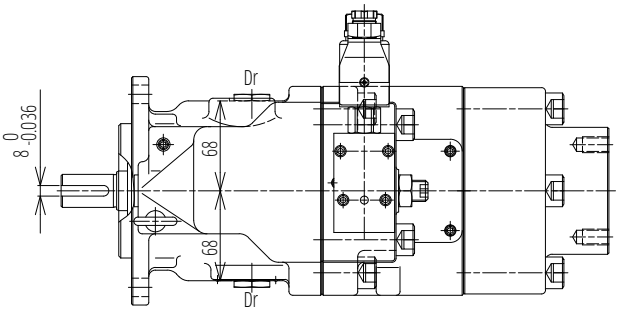

3-2 K3VR45/K3VL45 Installation (cont)

Open Circuit (K3VL45)

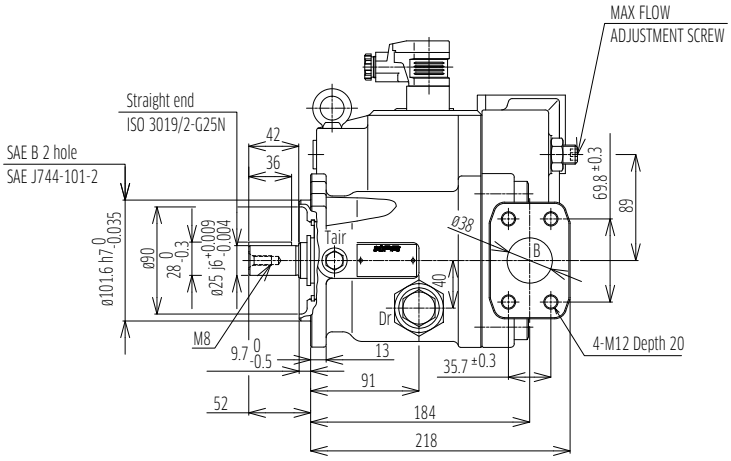

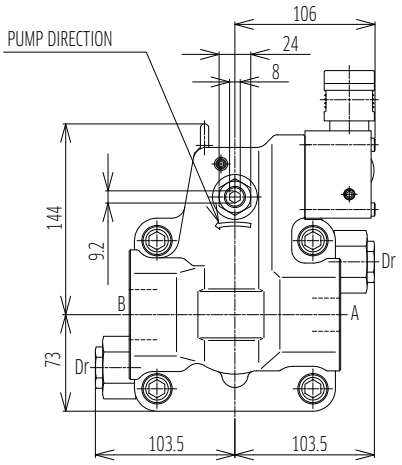

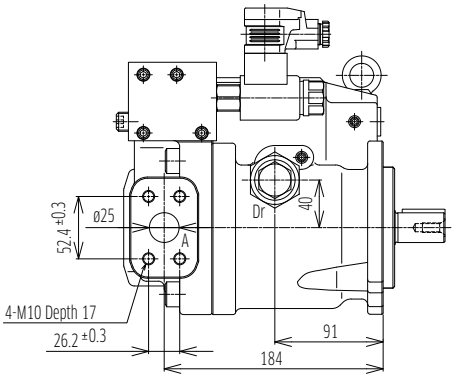

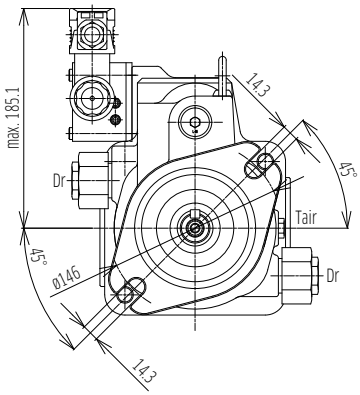

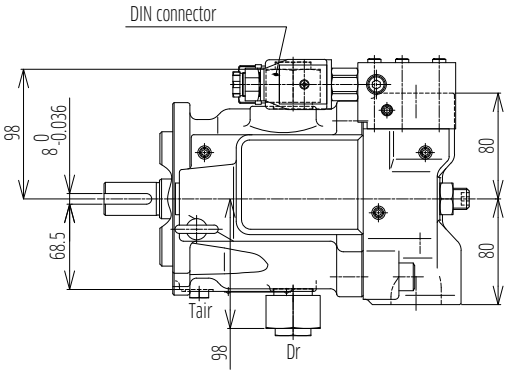

3-2 K3VR45/K3VL45 Installation (cont)

Mounting Flange and Shaft Options

Closed Circuit (K3VR45)

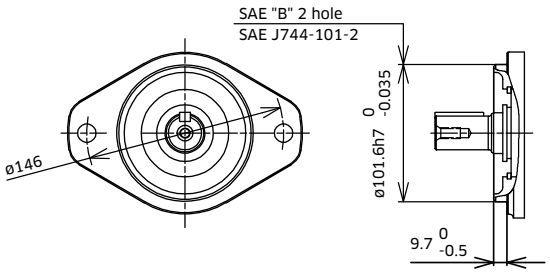

Open Circuit (K3VL45)

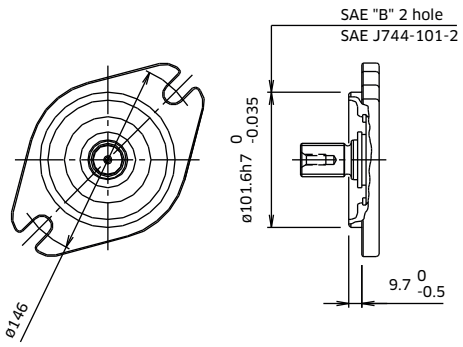

SAE 'BB' Straight Shaft - Option 'K'

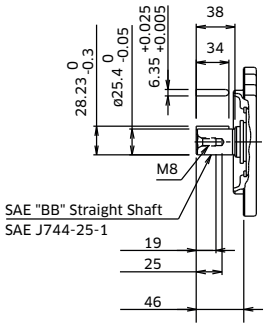

ISO (JIS) Straight Shaft - Option 'J' (with SAE Mount)

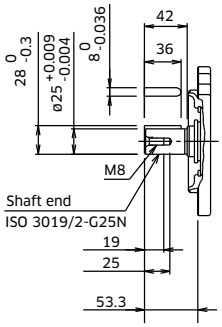

3-2 K3VR45/K3VL45 Installation (cont)

Porting Details

Closed Circuit (K3VR45)

Main SAE Flanged Ports

Des.	Port Name	Port Size	Tightening Torque (Nm)	Flange Threads
UNF Threaded Version ('S' in position 7 of model code)				
A1, A2	Suction, Delivery Port	SAE J518C Std pressure (code 61) 1"	57	⅜ -16UNC -2B x 18 mm
B	Supply Port	SAE J518C Std pressure (code 61) 1½"	98	½ -13UNC -2B x 22 mm
Metric Threaded Version ('M' in position 7 of model code)				
A1, A2	Suction, Delivery Port	SAE J518C Std pressure (code 61) 1"	57	M10 x 17
B	Supply Port	SAE J518C Std pressure (code 61) 1½"	98	M12 x 20

Auxiliary Ports

Des.	Port Name	Port Size	Tightening Torque (Nm)
SAE Version ('K' in position 6 of model code)			
D_r	Drain Port (x2)	¾ -16UNF-2B -14.3	98
T_{air}	Air Bleeder Port	7⁄16 -20UNF -2B -14	12
ISO Version ('J' in position 6 of model code)			
D_r	Drain Port (x2)	G½ -19	110
T_{air}	Air Bleeder Port	G¼ -15	36

Open Circuit (K3VL45)

Main SAE Flanged Ports

Des.	Port Name	Port Size	Tightening Torque (Nm)	Flange Threads
UNF Threaded Version ('S' in position 9 of model code)				
A	Delivery Port	SAE J518C Std pressure (code 61) 1"	57	⅜-16UNC-2B x 18 mm
B	Suction Port	SAE J518C Std pressure (code 61) 1½"	98	½-13UNC-2B x 22 mm
Metric Version ('M' in position 9 of model code)				
A	Delivery Port	SAE J518C Std pressure (code 61) 1"	57	M10 x 17
B	Suction Port	SAE J518C Std pressure (code 61) 1½"	98	M12 x 20

Auxiliary Ports

Des.	Port Name	Port Size	Tightening Torque (Nm)
SAE Version ('K' in position 8 of model)			
Dr	Drain Port (x2)	¾ -16UNF -2B -14.3	98
T_{air}	Air Bleeder Port	7⁄16 -20UNF -2B -14	12
ISO Version ('J' in position 8 of model code)			
Dr	Drain Port (x2)	G½ -19	108
T_{air}	Air Bleeder Port	7⁄16 -20UNF -2B -14	12

3-3 K3VR80/K3VL80 Installation

Closed Circuit (K3VR80)

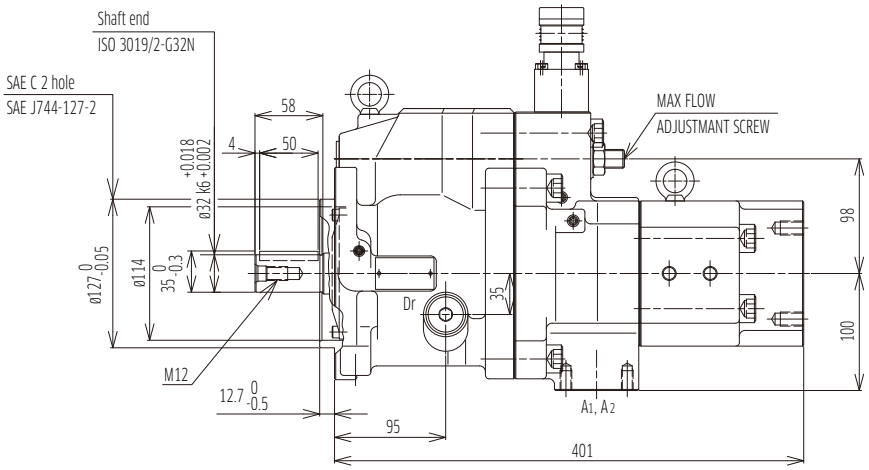

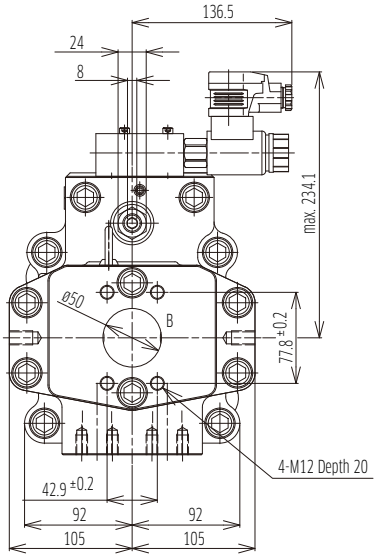

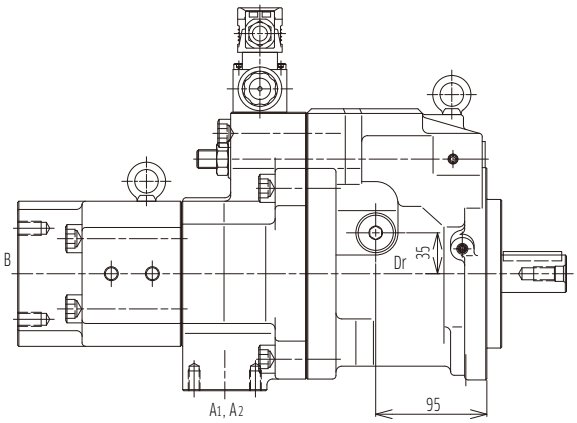

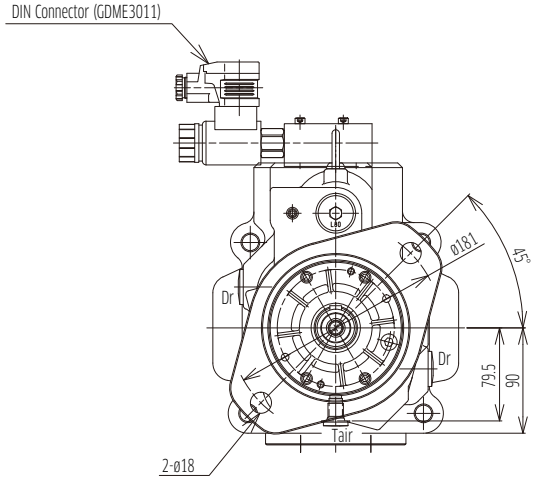

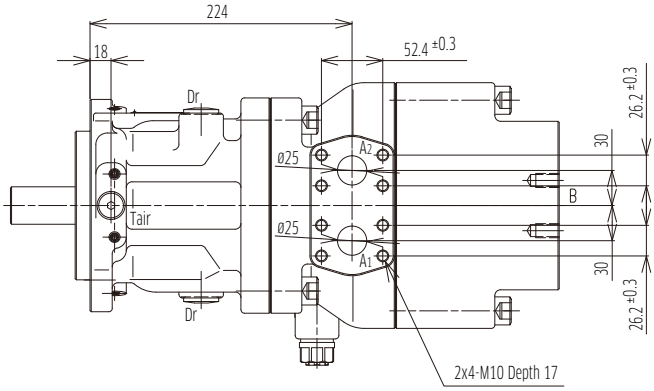

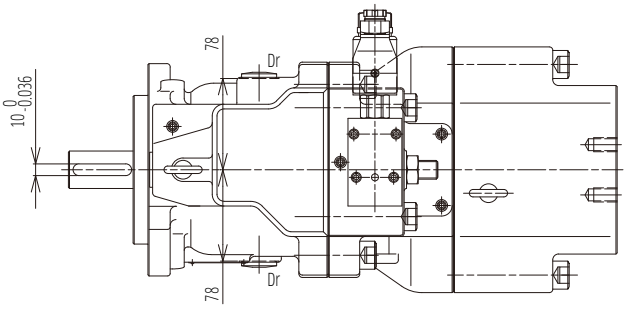

3-3 K3VR80/K3VL80 Installation (cont)

Open Circuit (K3VL80)

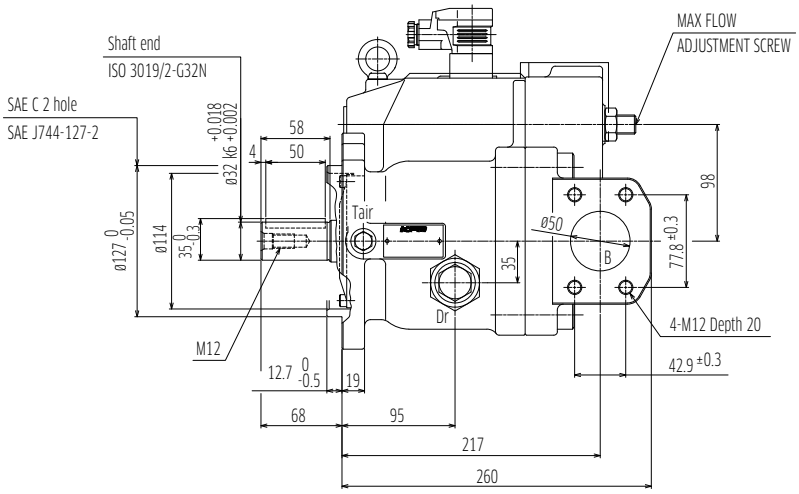

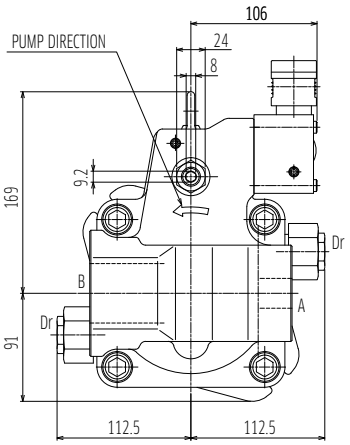

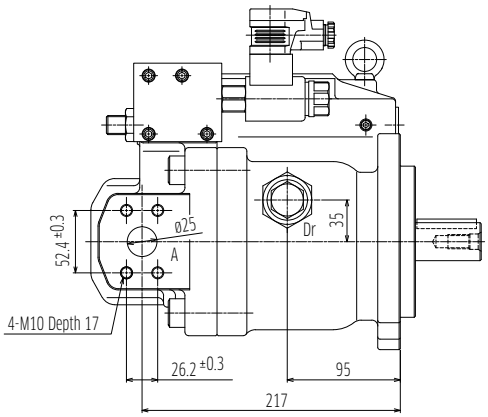

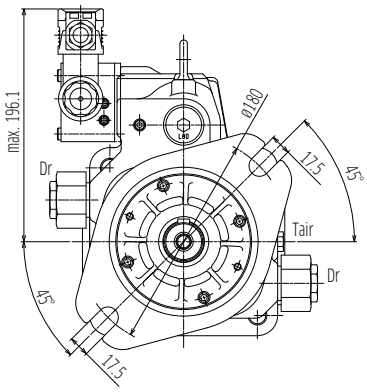

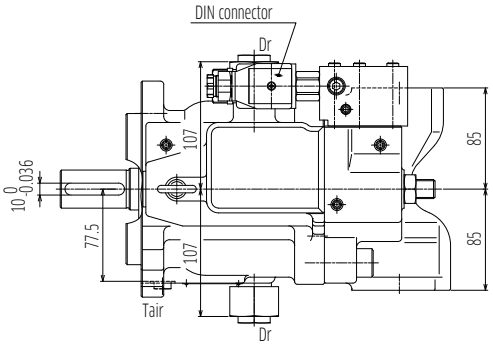

3-3 K3VR80/K3VL80 Installation (cont)

Mounting Flange and Shaft Options

Closed Circuit (K3VR80)

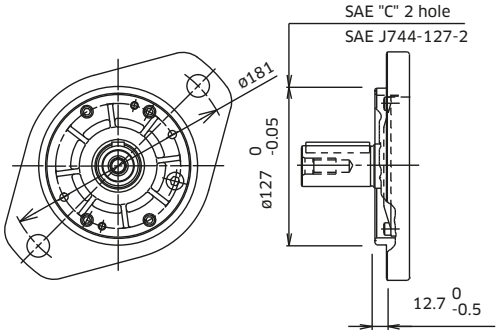

Open Circuit (K3VL80)

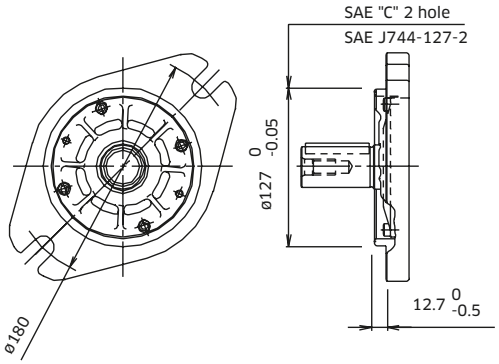

SAE 'C' Straight Shaft - Option 'K'

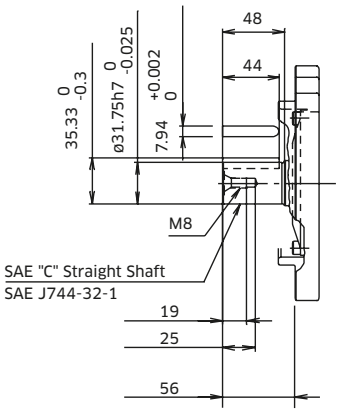

ISO (JIS) Straight Shaft - Option 'J' (with SAE Mount)

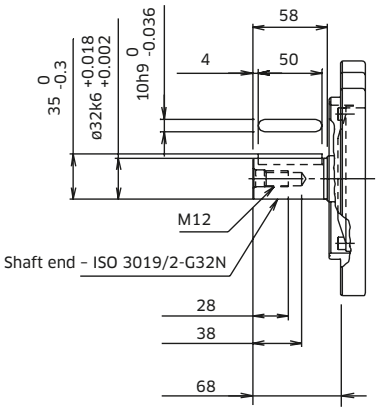

3-3 K3VR80/K3VL80 Installation (cont)

Porting Details

Closed Circuit (K3VR80)

Main SAE Flanged Ports

Des.	Port Name	Port Size	Tightening Torque (Nm)	Flange Threads
UNF Threaded Version ('S' in position 7 of model code)				
A1, A2	Delivery Port	SAE J518C Std pressure (code 61) 1"	57	⅜-16UNC-2B x 18 mm
B	Suction Port	SAE J518C Std pressure (code 61) 2"	98	½-13UNC-2B x 22 mm
Metric Threaded Version ('M' in position 7 of model code)				
A1, A2	Delivery Port	SAE J518C Std pressure (code 61) 1"	57	M10 x 17
B	Suction Port	SAE J518C Std pressure (code 61) 2"	98	M12 x 20

Auxiliary Ports

Des.	Port Name	Port Size	Tightening Torque (Nm)
SAE Version ('K' in position 6 of model code)			
D_r	Drain Port (x2)	¾ -16UNF -2B -14.3	98
T_{air}	Air Bleeder Port	7⁄16 -20UNF -2B -14	12
ISO Version ('J' in position 6 of model code)			
D_r	Drain Port (x2)	G½ -19	110
T_{air}	Air Bleeder Port	G¼ -15	36

Open Circuit (K3VL80)

Main SAE Flanged Ports

Des.	Port Name	Port Size	Tightening Torque (Nm)	Flange Threads
UNF Threaded Version ('S' in position 9 of model code)				
A	Delivery Port	SAE J518C Std pressure (code 61) 1"	57	⅜-16UNC-2B x 18 mm
B	Suction Port	SAE J518C Std pressure (code 61) 2"	98	½-13UNC-2B x 22 mm
Metric Version ('M' in position 9 of model code)				
A	Delivery Port	SAE J518C Std pressure (code 61) 1"	57	M10 x 17
B	Suction Port	SAE J518C Std pressure (code 61) 2"	98	M12 x 20

Auxiliary Ports

Des.	Port Name	Port Size	Tightening Torque (Nm)
SAE Version ('K' in position 8 of model code)			
D_r	Drain Port (x2)	¾ -16UNF -2B -14.3	98
T_{air}	Air Bleeder Port	7⁄16 -20UNF -2B -14	12
ISO Version ('J' in position 8 of model code)			
D_r	Drain Port (x2)	G½ -19	108
T_{air}	Air Bleeder Port	7⁄16 -20UNF -2B -14	12

3-4 K3VR140/K3VL140 Installation

Closed Circuit (K3VR140)

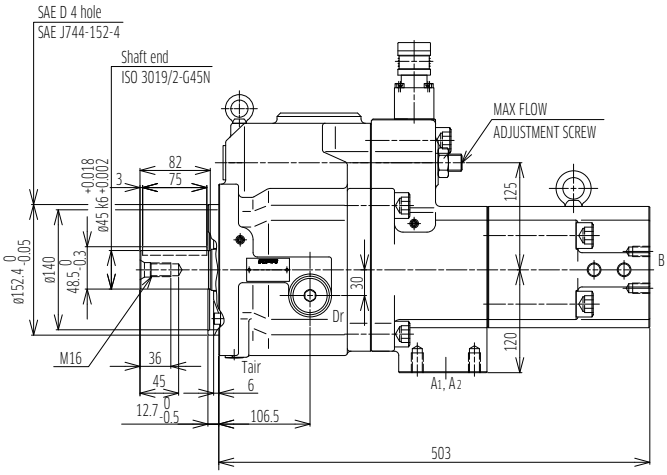

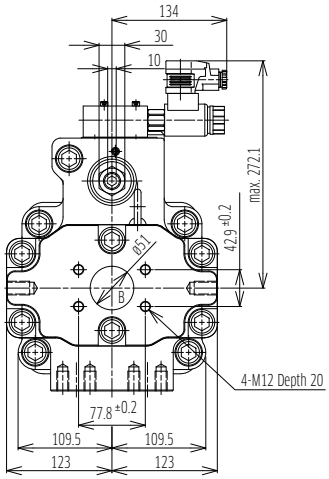

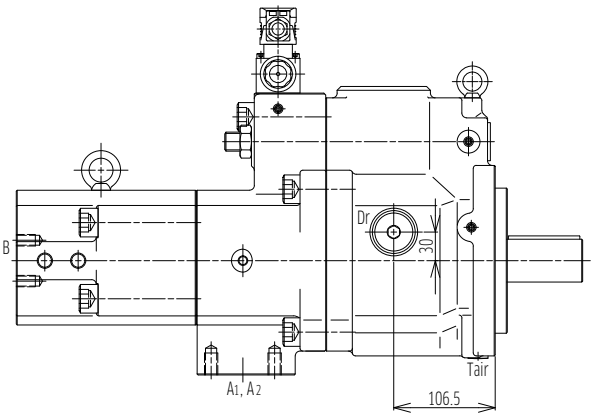

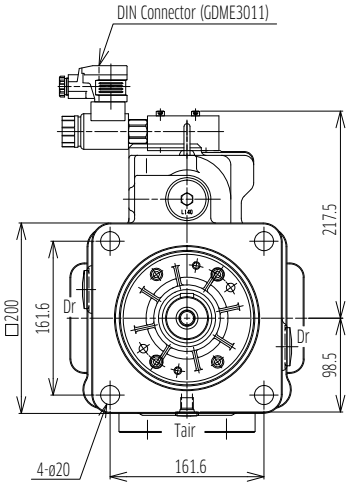

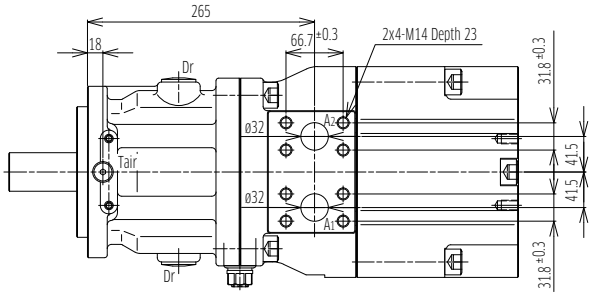

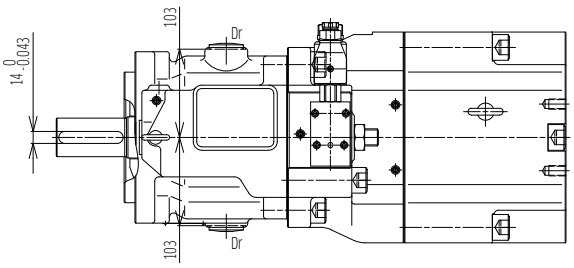

3-4 K3VR140/K3VL140 Installation (cont)

Open Circuit (K3VL140)

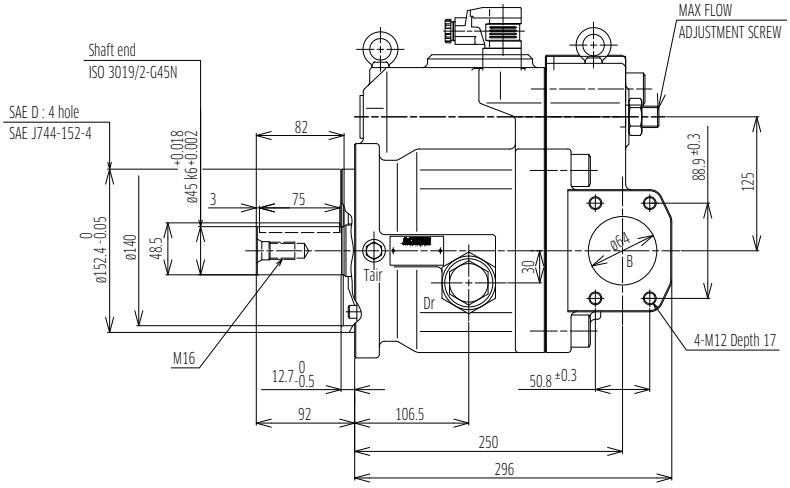

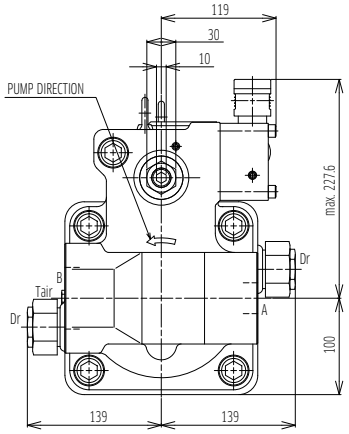

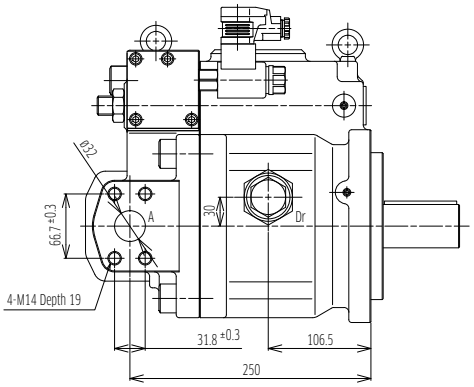

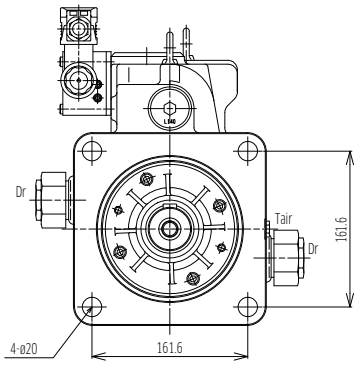

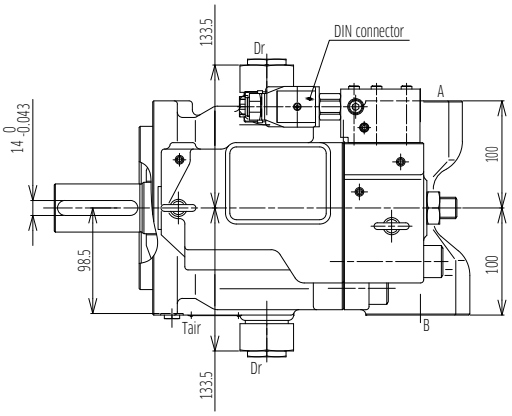

3-4 K3VR140/K3VL140 Installation (cont)

Mounting Flange and Shaft Options

Closed Circuit (K3VR140)/Open Circuit (K3VL140)

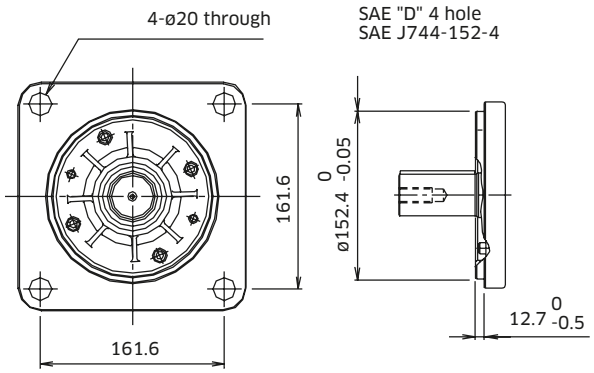

SAE 'D' Straight Shaft - Option 'K'

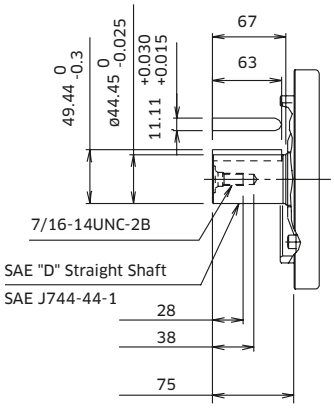

ISO (JIS) Straight Shaft - Option 'J' (with SAE Mount)

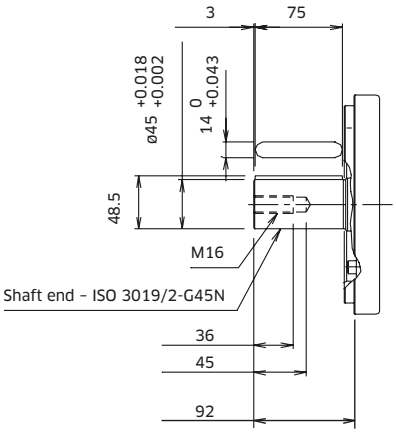

3-4 K3VR140/K3VL140 Installation (cont)

Porting Details

Closed Circuit (K3VR140)

Main SAE Flanged Ports

Des.	Port Name	Port Size	Tightening Torque (Nm)	Flange Threads
UNF Threaded Version ('S' in position 7 of model code)				
A1, A2	Delivery Port	SAE J518C high pressure (code 62) 1¼"	157	½ -13UNC -2B x 22 mm
B	Suction Port	SAE J518C Std pressure (code 61) 2½"	98	½ -13UNC -2B x 22 mm
Metric Threaded Version ('M' in position 7 of model code)				
A1, A2	Delivery Port	SAE J518C high pressure (code 62) 1¼"	157	M14 x 23
B	Suction Port	SAE J518C Std pressure (code 61) 2½"	98	M12 x 20

Auxiliary Ports

Des.	Port Name	Port Size	Tightening Torque (Nm)
SAE Version ('K' in position 6 of model code)			
Dr	Drain Port (x2)	1 1/16 -12UNF -2B -19	167
T_{air}	Air Bleeder Port	7/16 -20UNF -2B -14	12
ISO Version ('J' in position 6 of model code)			
Dr	Drain Port (x2)	G ¾ -20	170
T_{air}	Air Bleeder Port	G ¼ -15	36

Open Circuit (K3VL140)

Main SAE Flanged Ports

Des.	Port Name	Port Size	Tightening Torque (Nm)	Flange Threads
UNF Threaded Version ('S' in position 9 of model code)				
A	Delivery Port	SAE J518C high pressure (code 62) 1¼"	157	½ -13UNC -2B x 22 mm
B	Suction Port	SAE J518C Std pressure (code 61) 2½"	98	½ -13UNC -2B x 22 mm
Metric Threaded Version ('M' in position 9 of model code)				
A	Delivery Port	SAE J518C high pressure (code 62) 1¼"	157	M14 x 19 *
B	Suction Port	SAE J518C Std pressure (code 61) 2½"	98	M12 x 17

** Note: ISO 6162 quotes M12*

Auxiliary Ports

Des.	Port Name	Port Size	Tightening Torque (Nm)
SAE Version ('K' in position 8 of model code)			
Dr	Drain Port (x2)	1 1/16 -12UNF -2B -19	167
T_{air}*	Air Bleeder Port	7/16 -20UNF -2B -14	12
ISO Version ('J' in position 8 of model code)			
Dr	Drain Port (x2)	G ¾ -20	167
T_{air}	Air Bleeder Port	7/16 -20UNF -2B -14	12

3-5 K3VR200/K3VL200 Installation

Closed Circuit (K3VR200)

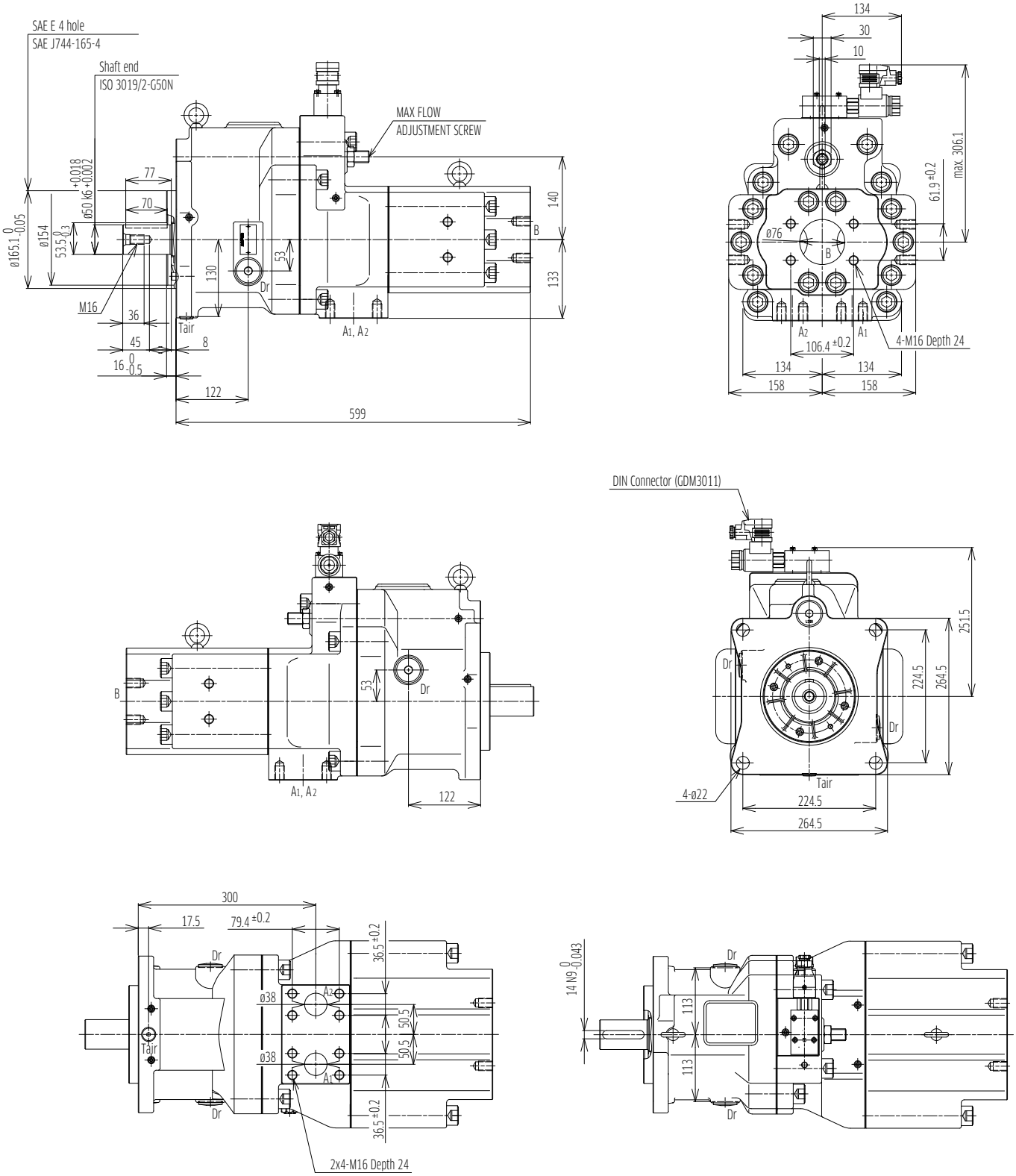

3-5 K3VR200/K3VL200 Installation (cont)

Open Circuit (K3VL200)

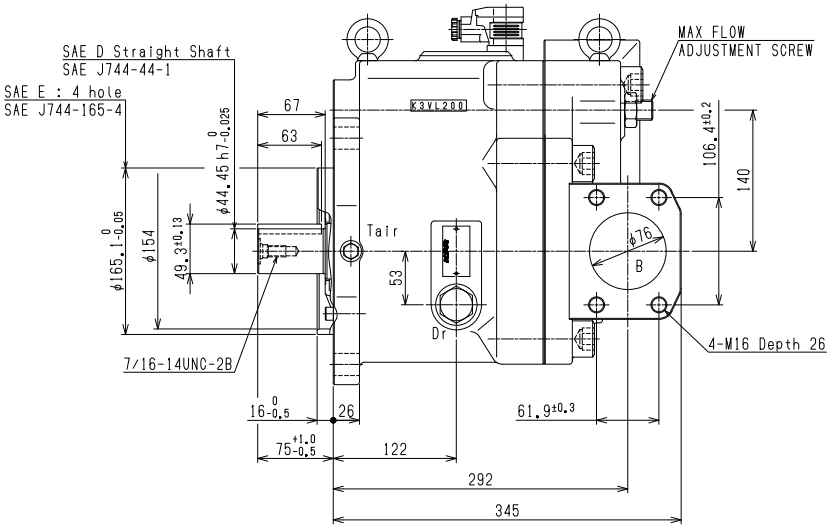

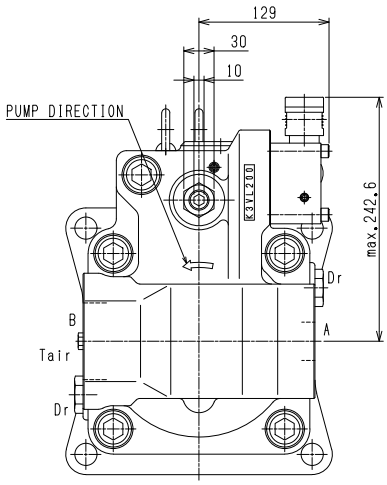

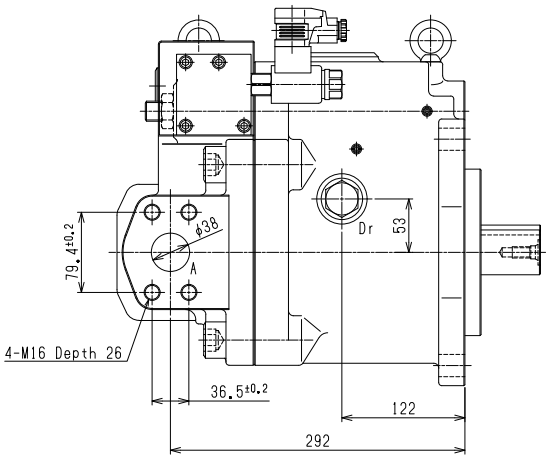

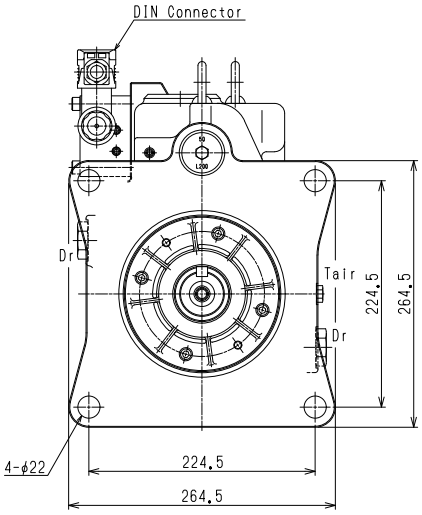

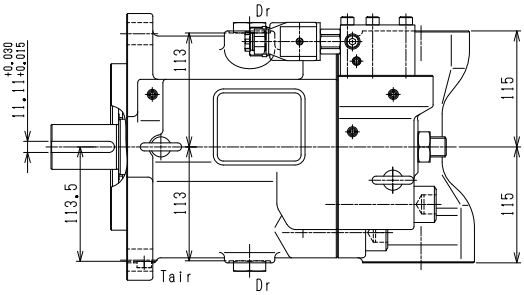

3-5 K3VR200/K3VL200 Installation (cont)

Mounting Flange and Shaft Options

Closed Circuit (K3VR200)/Open Circuit (K3VL200)

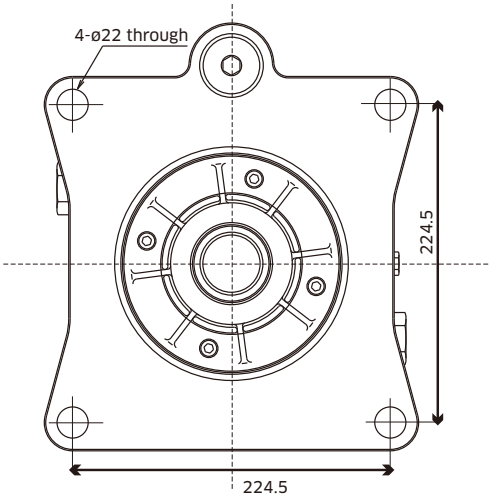

SAE 'D' Straight Shaft - Option 'K'

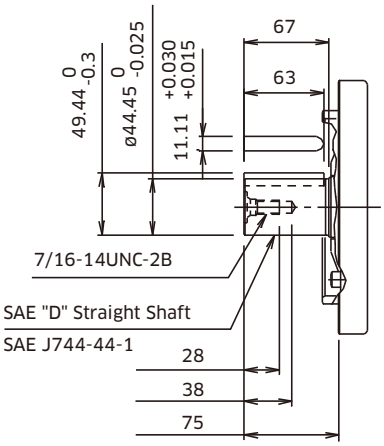

ISO (JIS) Straight Shaft - Option 'J' (with SAE Mount) *Only for K3VR

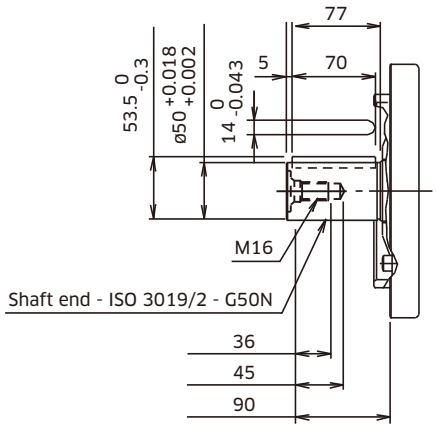

3-5 K3VR200/K3VL200 Installation (cont)

Porting Details

Closed Circuit (K3VR200)

Main SAE Flanged Ports

Des.	Port Name	Port Size	Tightening Torque (Nm)	Flange Threads
UNC Threaded Version ('S' in position 7 of model code)				
A1, A2	Delivery Port	SAE J518C high pressure (code 62) 1½"	235	⅝ -11UNC -2B x 25mm
B	Suction Port	SAE J518C Std pressure (code 61) 3"	235	⅝ -11UNC -2B x 25mm
Metric Threaded Version ('M' in position 7 of model code)				
A1, A2	Delivery Port	SAE J518C high pressure (code 62) 1½"	235	M16 x 24
B	Suction Port	SAE J518C Std pressure (code 61) 3"	235	M16 x 24

Auxiliary Ports

Des.	Port Name	Port Size	Tightening Torque (Nm)
SAE Version ('K' in position 6 of model code)			
D_r	Drain Port (x2)	1 1/16 -12UNF -2B -19	170
T_{air}	Air Bleeder Port	7/16 -20UNF -2B -14	12
ISO Version ('J' in position 6 of model code)			
D_r	Drain Port (x2)	G ¾ -20	170
T_{air}	Air Bleeder Port	G ¼ -15	36

Open Circuit (K3VL200)

Main SAE Flanged Ports

Des.	Port Name	Port Size	Tightening Torque (Nm)	Flange Threads
UNC Threaded Version ('S' in position 9 of model code)				
A	Delivery Port	SAE J518C high pressure (code 62) 1½"	235	⅝ -11UNC -2B x 25mm
B	Suction Port	SAE J518C Std pressure (code 61) 3"	235	⅝ -11UNC -2B x 25mm
Metric Threaded Version ('M' in position 9 of model code)				
A	Delivery Port	SAE J518C high pressure (code 62) 1½"	235	M16 x 24
B	Suction Port	SAE J518C Std pressure (code 61) 3"	235	M16 x 24

Auxiliary Ports

Des.	Port Name	Port Size	Tightening Torque (Nm)
SAE Version ('K' in position 8 of model code)			
D_r	Drain Port (x2)	1 1/16 -12UNF -2B -19	170
T_{air}	Air Bleeder Port	7/16 -20UNF -2B -14	12

3-6 Calibration of Regulators

Maximum displacement

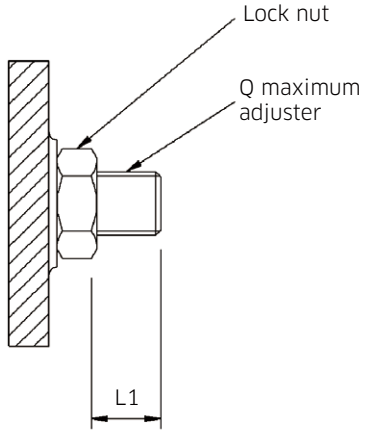

Maximum displacement adjustment	Pump	K3VR22	K3VR45 K3VL45	K3VR80 K3VL80	K3VR140 K3VL140	K3VR200 K3VL200
Adj. screw Allen key size	**mm**	6	8	8	10	10
Displacement change per turn	**cm³**	3.1	4.9	6.0	12.0	15.3
Adjustable range of displacement	**cm³**	11-22	16-45	35-80	70-140	100-200
Length of adjustment range (L1)	**mm**	4.6-10.7	0.5-12.1	0.5-15.0	1.0-16	8.9-25.3
Lock nut size	**mm**	19	24	24	30	30
Lock nut tightening torque	**Nm**	57	128	128	235	235

Minimum displacement

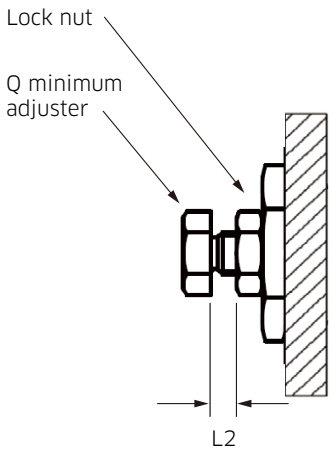

Minimum displacement adjustment	Pump	K3VR22	
	Setting	Low	High
Adj. screw Allen key size	**mm**	17	
Displacement change per turn	**cm³**	2.7	
Adjustable range of displacement	**cm³**	4-11	11-18
Length of adjustment range (L2)	**mm**	5.2-1.3	5.2-1.3
Lock nut size	**mm**	17	
Lock nut tightening torque	**Nm**	30	

NOTES

Conversion Table

Pressure	
bar	psi
1	14.5
Flow	
l/min	gal/min
1	0.264 US
1	0.219 UK
Length	
mm	inch
25.4	1
Torque	
Nm	lbf.ft
1	0.737
Power	
kW	hp
1	1.341
Mass	
kg	lbs
1	2.2

NOTES

Kawasaki Heavy Industries, Ltd.

Precision Machinery Business Division

https://www.khi.co.jp/kpm/

Tokyo Head Office
1-14-5 Kaigan, Minato-ku, Tokyo 105-8315, Japan
Phone +81-3-3435-6862 Fax. +81-3-3435-2023

Kobe Head Office
Kobe Crystal Tower, 1-3 Higashikawasaki-cho 1-chome, Chuo-ku, Kobe 650-8680, Japan
Phone +81-78-360-8607 Fax. +81-78-360-8609

Nishi-kobe Works
234, Matsumoto, Hasetani-cho, Nishi-ku, Kobe 651-2239, Japan
Phone +81-78-991-1160 Fax. +81-78-991-3186

OVERSEAS SUBSIDIARIES

Kawasaki Precision Machinery (UK) Ltd.
Ernesettle Lane, Ernesettle, Plymouth, Devon, PL5 2SA United Kingdom
Phone +44-1752-364394 Fax. +44-1752-364816
http://www.kpm-eu.com

Kawasaki Precision Machinery (U.S.A.), Inc.
3838 Broadmoor Avenue S.E. Grand Rapids, Michigan 49512, U.S.A.
Phone +1-616-975-3100 Fax. +1-616-975-3103
https://www.kpm-usa.com

Kawasaki Precision Machinery (Suzhou) Ltd.
668 JianLin Rd, New District, Suzhou, 215151 China
Phone +86-512-6616-0365 Fax. +86-512-6616-0366

Kawasaki Precision Machinery Trading (Shanghai) Co., Ltd.
17th Floor (Room 1701), The Headquarters Building, No168, XiZang Road (M), Huangpu District, Shanghai, 200001, China
Phone +86-021-3366-3800 Fax. +86-021-3366-3808

Kawasaki Chunhui Precision Machinery (Zhejiang) Ltd.
No.200 Yasha Road Shangyu Economic Development Zone, Shansyu, Zhejiang, 312300, China
Phone +86-575-8215-6999 Fax. +86-575-8215-8699

Flutek, Ltd.
(Sinchon-dong)6, Gongdan-ro 98beon-gil, Seongsan-gu, Changwon-si, Gyeongsangnam-do, Korea (51567)
Phone +82-55-210-5900 Fax. +82-55-286-5557

Wipro Kawasaki Precision Machinery Private Limited
No. 15, Sy. No. 35 & 37, Kumbalgodu Industrial Area, Kumbalgodu Village, Kengeri Hobli, Bangalore, – 560074 ,India

△
QR code
Precision Machinery Business Division Website

Cat. No. KPM2202 Jan. '22Ⓐ