10

Helical inline
Dimensional drawings - iC

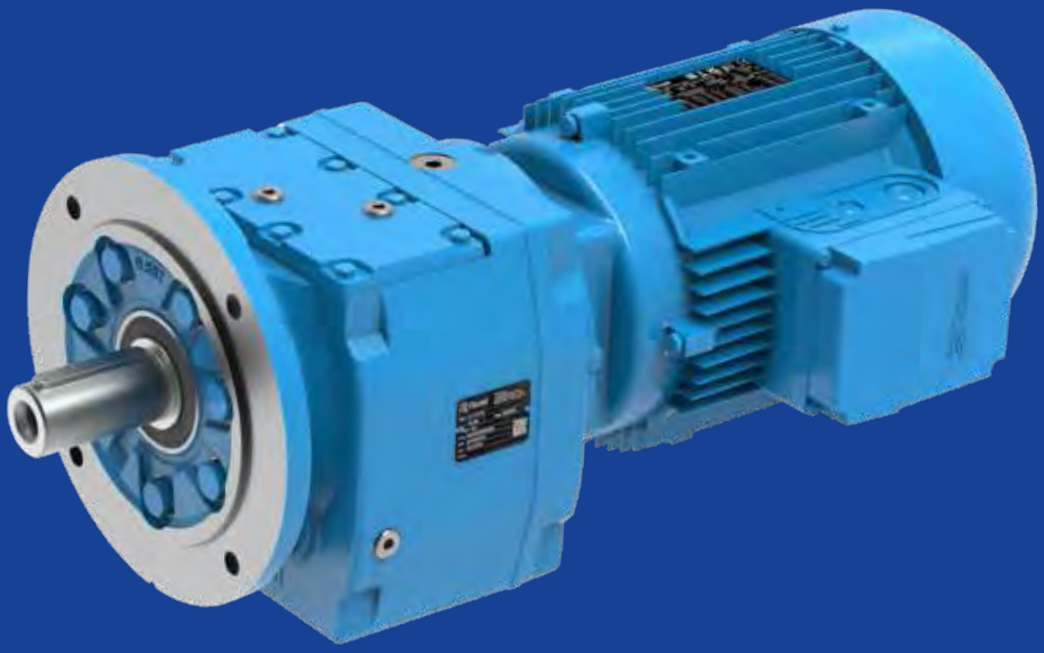

Section contents

10.1	iC 27...	134
10.2	iC 37...	136
10.3	iC 47...	138
10.4	iC 57...	140
10.5	iC 67...	142
10.6	iC 77..	144
10.7	iC 87...	146
10.8	iC 97...	148

10.1

iC 27...PE

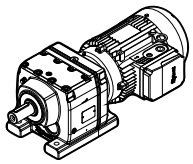

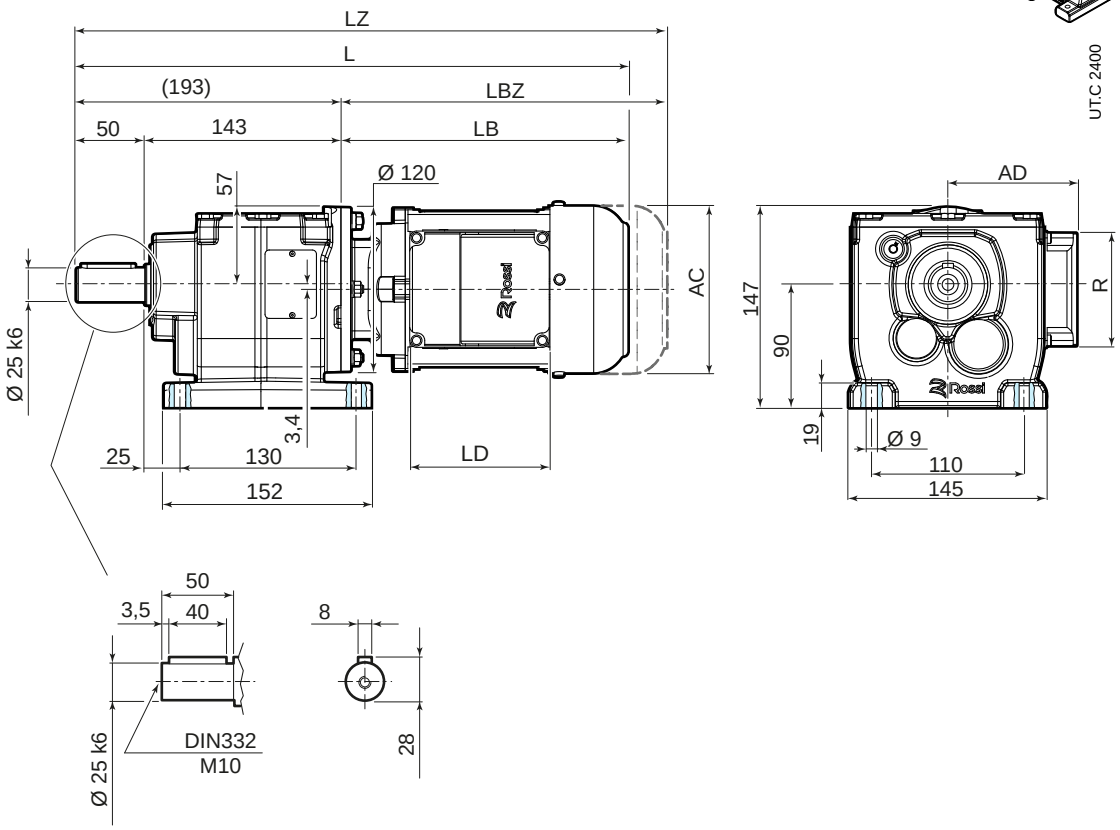

85 74 208

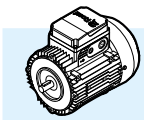

	63	71	80	90S [2]	90L	100	112
AC	123	138	156	176	176	194	218
AD	95	112	121	141	141	151	163
LB	211	237	266	290	320	351	389
LBZ	266	299	335	369	399	446	488
L [1]	404	430	459	483	513	544	582
LZ [1]	459	492	528	562	592	639	681
LD	103	103	103	136	136	136	136
R	86	86	86	106	106	106	106

[1] See also pages 80, 81.
[2] For motors HB3-HB3Z 90S 2, HB3-HB3Z 90S 4 dimensions as motor size

iC 27...FE

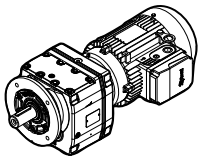

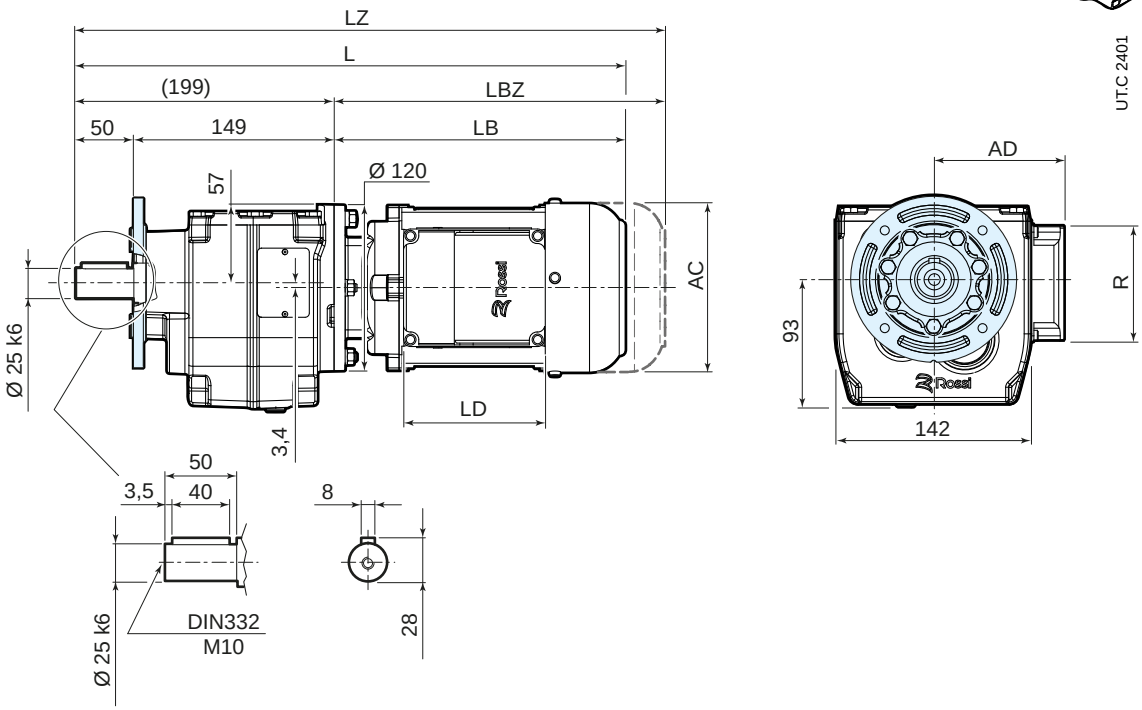

F212 Ø 120

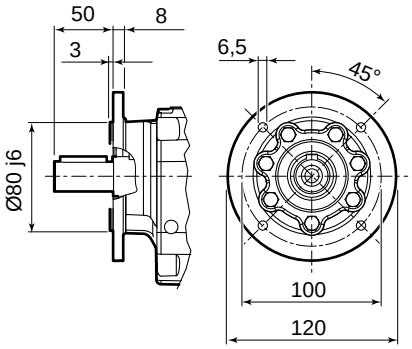

F214 Ø 140

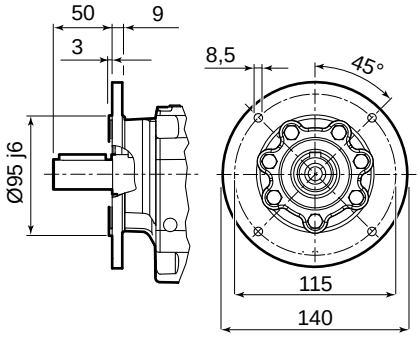

F216 Ø 160

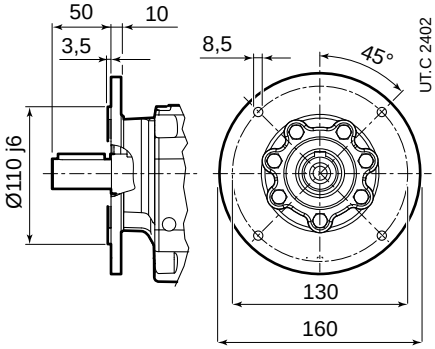

85 74 208

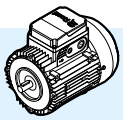

	63	71	80	90S [2]	90L	100	112
AC	123	138	156	176	176	194	218
AD	95	112	121	141	141	151	163
LB	211	237	266	290	320	351	389
LBZ	266	299	335	369	399	446	488
L [1]	410	436	465	489	519	550	588
LZ [1]	465	498	534	568	598	645	687
LD	103	103	103	136	136	136	136
R	86	86	86	106	106	106	106

[1] See also pages 80, 81.
[2] For motors HB3-HB3Z 90S 2, HB3-HB3Z 90S 4 dimensions as motor size

10.2

iC 37...PE

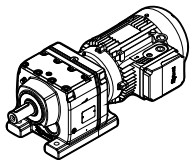

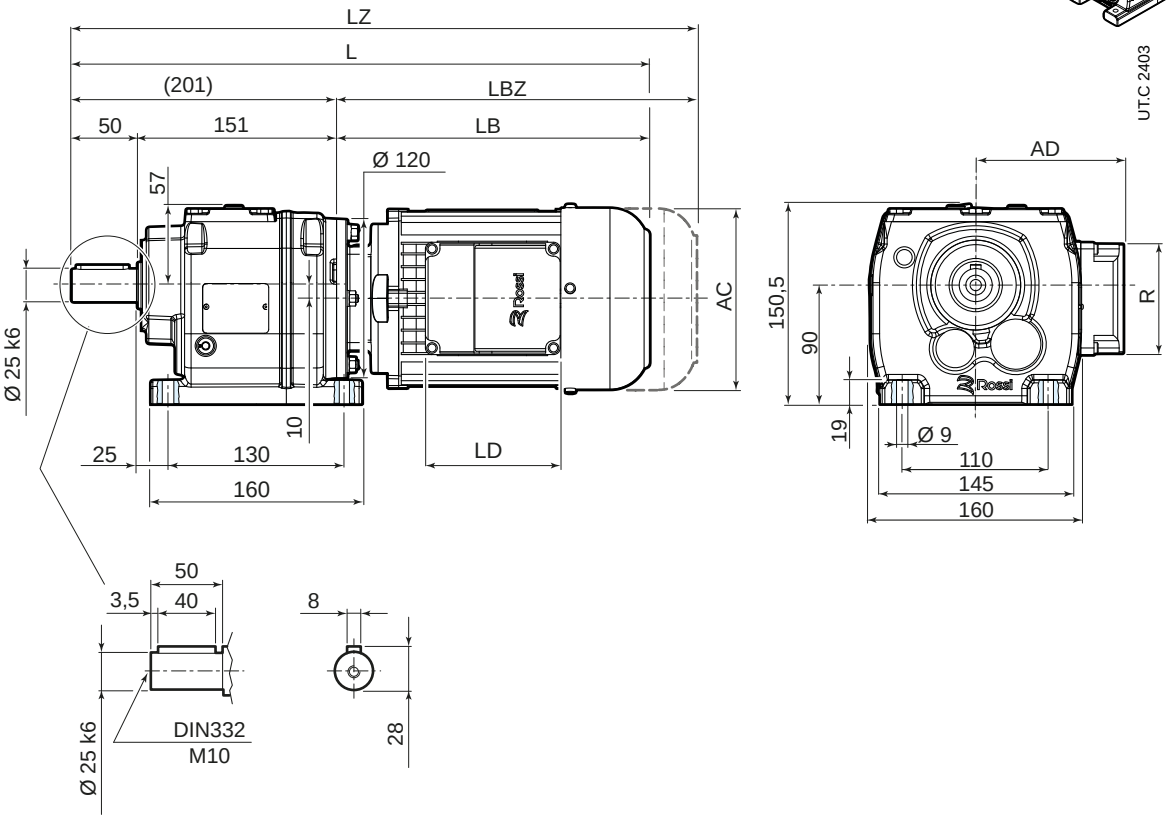

85 74 208

	63	71	80	90S [2]	90L	100	112
AC	123	138	156	176	176	194	218
AD	95	112	121	141	141	151	163
LB	211	237	266	290	320	351	389
LBZ	266	299	335	369	399	446	488
L [1]	412	438	467	491	521	552	590
LZ [1]	467	500	536	570	600	647	689
LD	103	103	103	136	136	136	136
R	86	86	86	106	106	106	106

[1] See also pages 80, 81.
[2] For motors HB3-HB3Z 90S 2, HB3-HB3Z 90S 4 dimensions as motor size

iC 37...FE

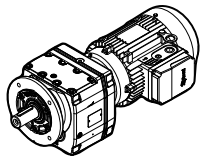

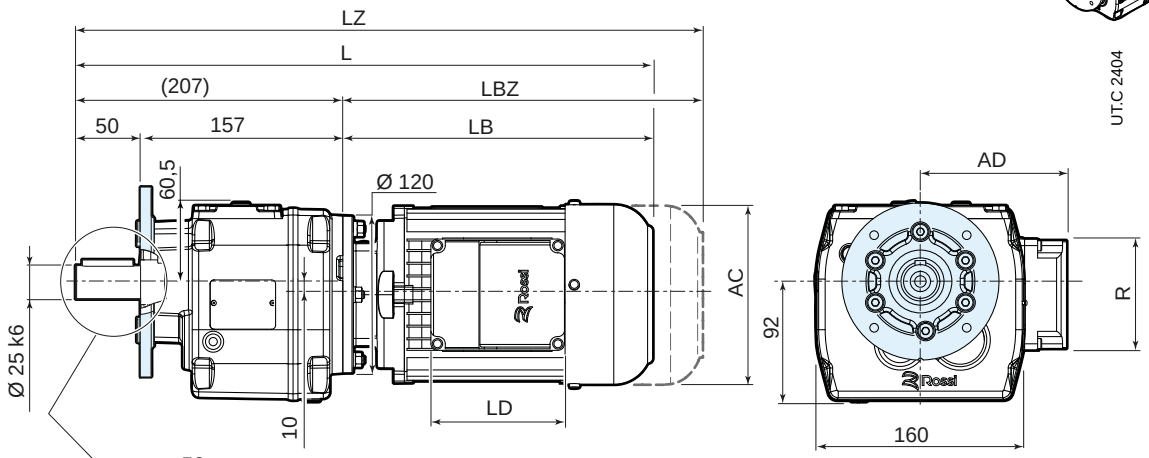

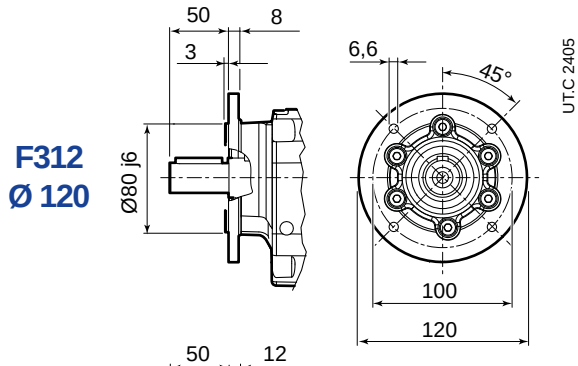

F312
Ø 120

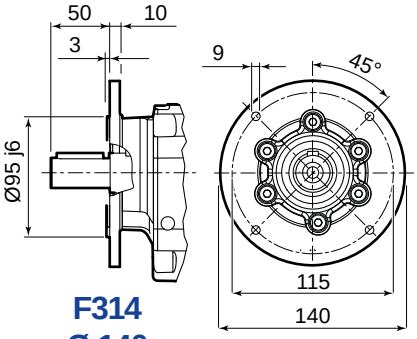

F314
Ø 140

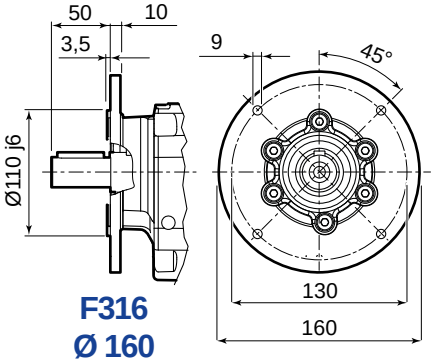

F316
Ø 160

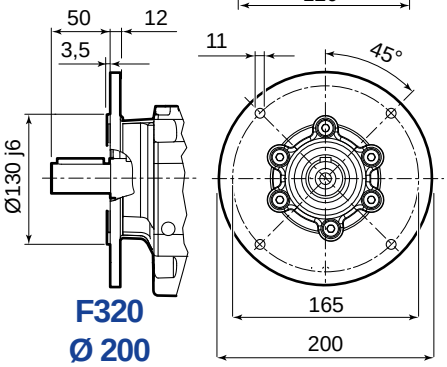

F320
Ø 200

85 74 208

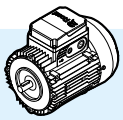

	63	71	80	90S [2]	90L	100	112
AC	123	138	156	176	176	194	218
AD	95	112	121	141	141	151	163
LB	211	237	266	290	320	351	389
LBZ	266	299	335	369	399	446	488
L [1]	418	444	473	497	527	558	596
LZ [1]	473	506	542	576	606	653	695
LD	103	103	103	136	136	136	136
R	86	86	86	106	106	106	106

[1] See also pages 80, 81.
[2] For motors HB3-HB3Z 90S 2, HB3-HB3Z 90S 4 dimensions as motor size

10.3

iC 47...PE

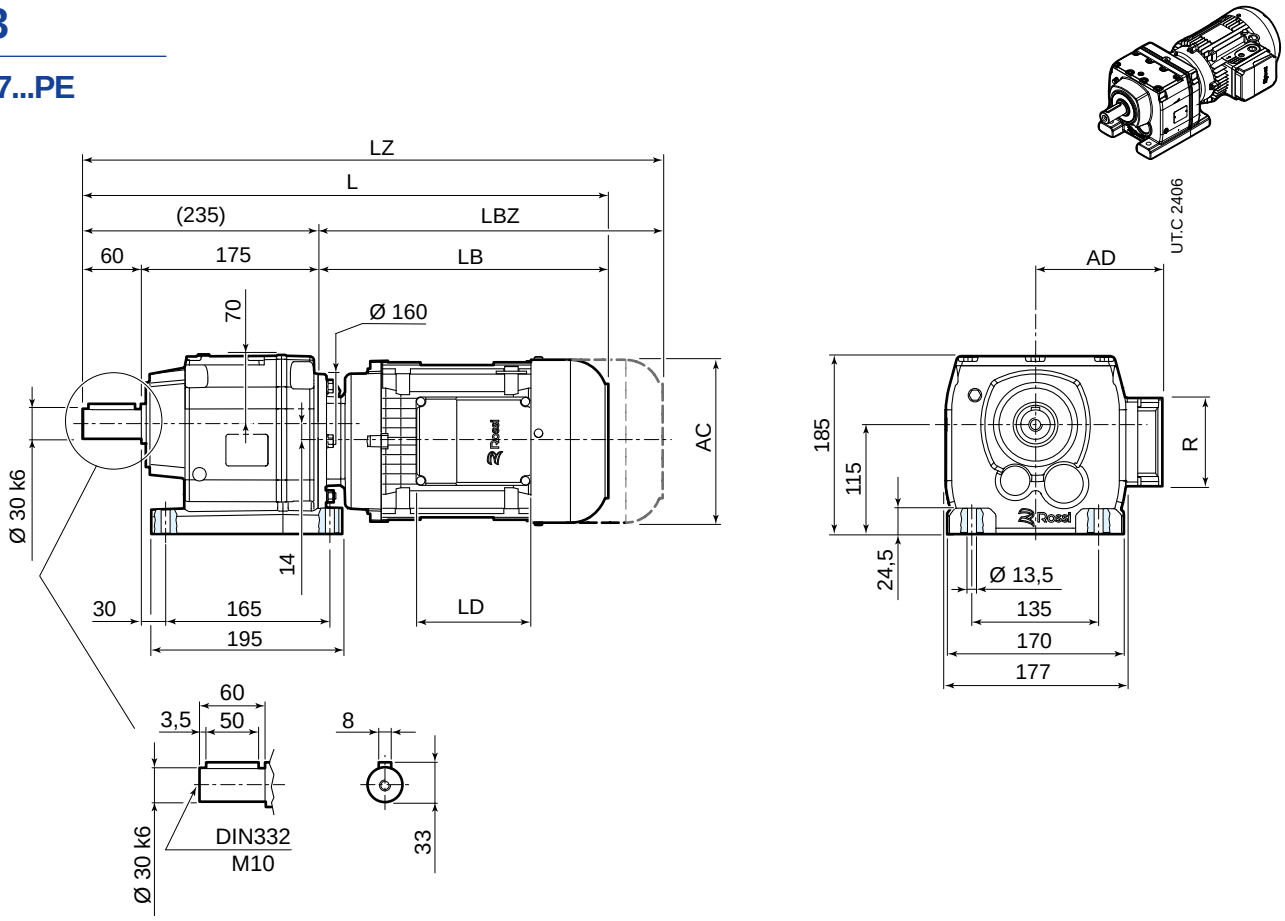

85 74 208

	63	71	80	90S [2]	90L	100	112	132S [3]	132M
AC	123	138	156	176	176	194	218	257	257
AD	95	112	121	141	141	151	163	194	194
LB	205	231	260	283	313	345	383	439	499
LBZ	260	293	329	362	392	440	482	547	607
L [1]	440	466	495	518	548	580	618	674	734
LZ [1]	495	528	564	597	627	675	717	782	842
LD	103	103	103	136	136	136	136	190	190
R	86	86	86	106	106	106	106	148	148

[1] See also pages 80, 81.
[2] For motors HB3-HB3Z 90S 2, HB3-HB3Z 90S 4 dimensions as motor size
[3] For motors HB3-HB3Z 132 SB 2, HB3-HB3Z 132SC 2, HB3-HB3Z 132S 4 dimensions as motor size 132M

iC 47...FE

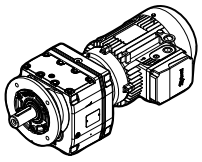

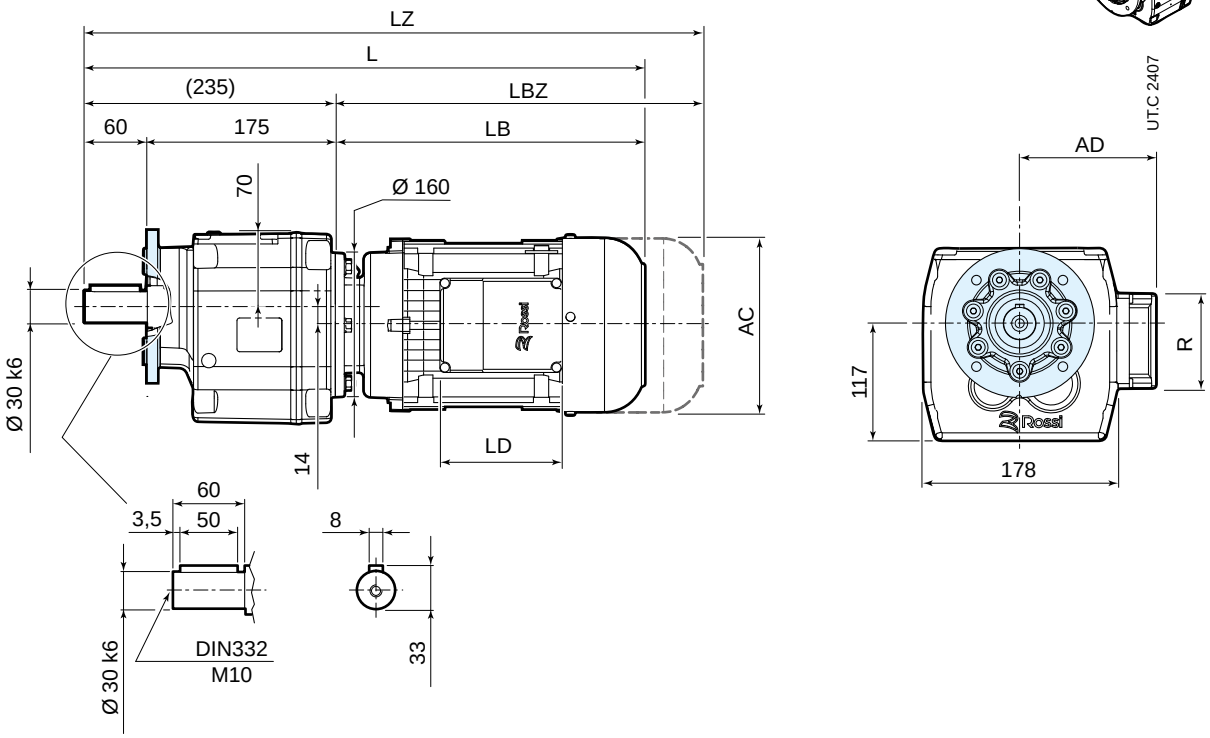

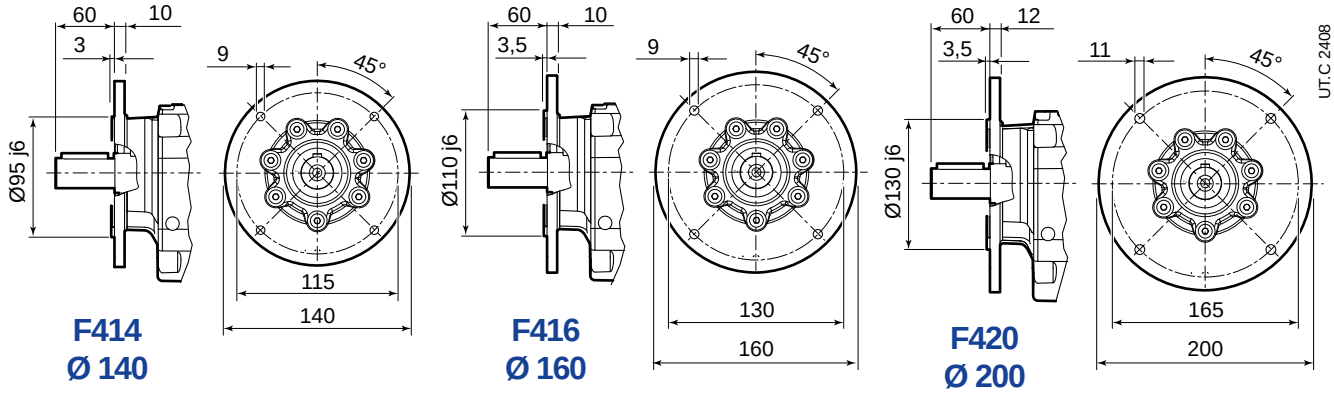

85 74 208

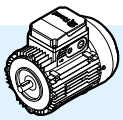

	63	71	80	90S [2]	90L	100	112	132S [3]	132M
AC	123	138	156	176	176	194	218	257	257
AD	95	112	121	141	141	151	163	194	194
LB	205	231	260	283	313	345	383	439	499
LBZ	260	293	329	362	392	440	482	547	607
L [1]	440	466	495	518	548	580	618	674	734
LZ [1]	495	528	564	597	627	675	717	782	842
LD	103	103	103	136	136	136	136	190	190
R	86	86	86	106	106	106	106	148	148

[1] See also pages 80, 81.
[2] For motors HB3-HB3Z 90S 2, HB3-HB3Z 90S 4 dimensions as motor size
[3] For motors HB3-HB3Z 132 SB 2, HB3-HB3Z 132SC 2, HB3-HB3Z 132S 4 dimensions as motor size 132M

10.4

iC 57...PE

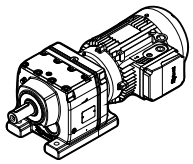

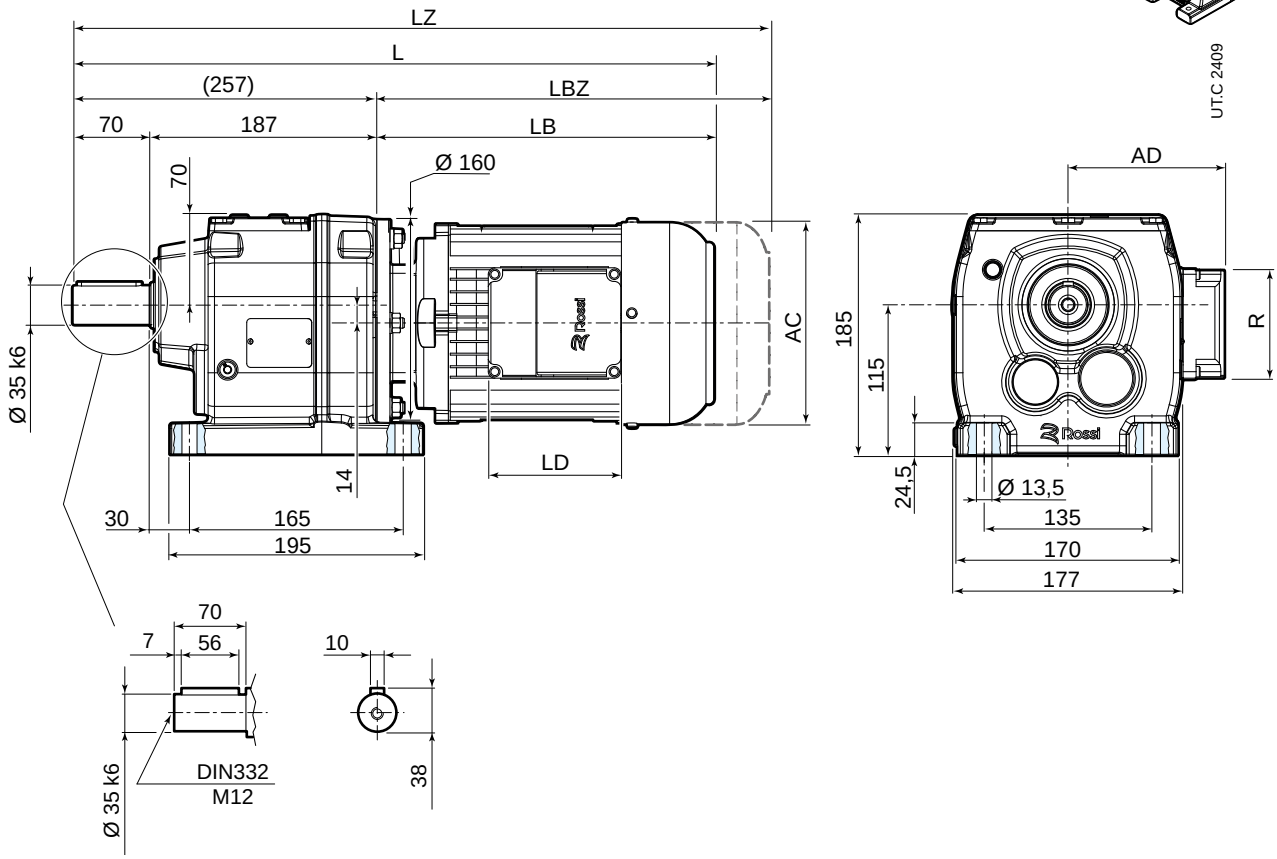

85 74 208

	63	71	80	90S [2]	90L	100	112	132S [3]	132M
AC	123	138	156	176	176	194	218	257	257
AD	95	112	121	141	141	151	163	194	194
LB	205	231	260	283	313	345	383	439	499
LBZ	260	293	329	362	392	440	482	547	607
L [1]	462	488	517	540	570	602	640	696	756
LZ [1]	517	550	586	619	649	697	739	804	864
LD	103	103	103	136	136	136	136	190	190
R	86	86	86	106	106	106	106	148	148

[1] See also pages 80, 81.
[2] For motors HB3-HB3Z 90S 2, HB3-HB3Z 90S 4 dimensions as motor size
[3] For motors HB3-HB3Z 132 SB 2, HB3-HB3Z 132SC 2, HB3-HB3Z 132S 4 dimensions as motor size 132M

iC 57...FE

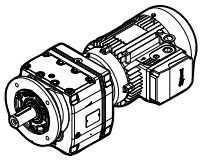

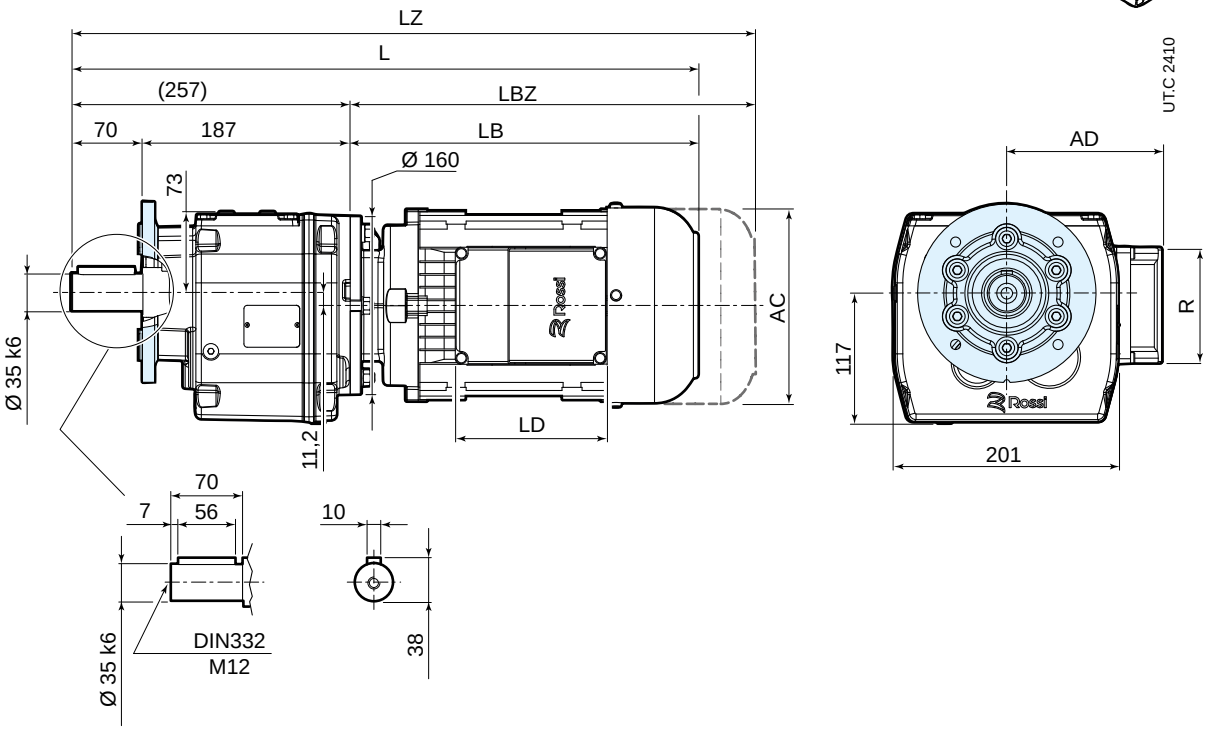

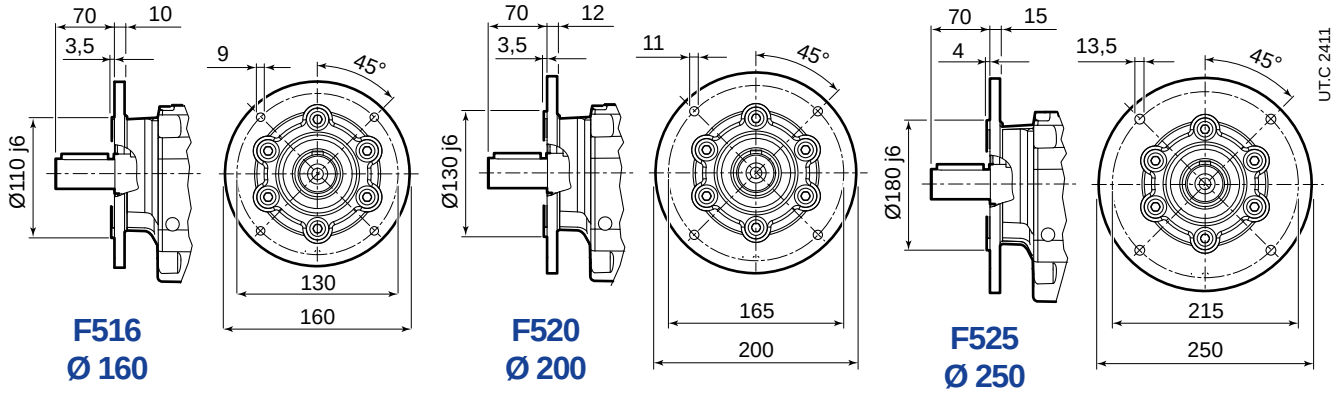

85 74 208

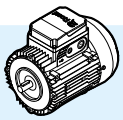

	63	71	80	90S [2]	90L	100	112	132S [3]	132M
AC	123	138	156	176	176	194	218	257	257
AD	95	112	121	141	141	151	163	194	194
LB	205	231	260	283	313	345	383	439	499
LBZ	260	293	329	362	392	440	482	547	607
L [1]	462	488	517	540	570	602	640	696	756
LZ [1]	517	550	586	619	649	697	739	804	864
LD	103	103	103	136	136	136	136	190	190
R	86	86	86	106	106	106	106	148	148

[1] See also pages 80, 81.
[2] For motors HB3-HB3Z 90S 2, HB3-HB3Z 90S 4 dimensions as motor size
[3] For motors HB3-HB3Z 132 SB 2, HB3-HB3Z 132SC 2, HB3-HB3Z 132S 4 dimensions as motor size 132M

10.5

iC 67...PE

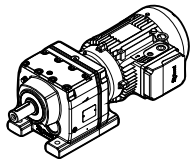

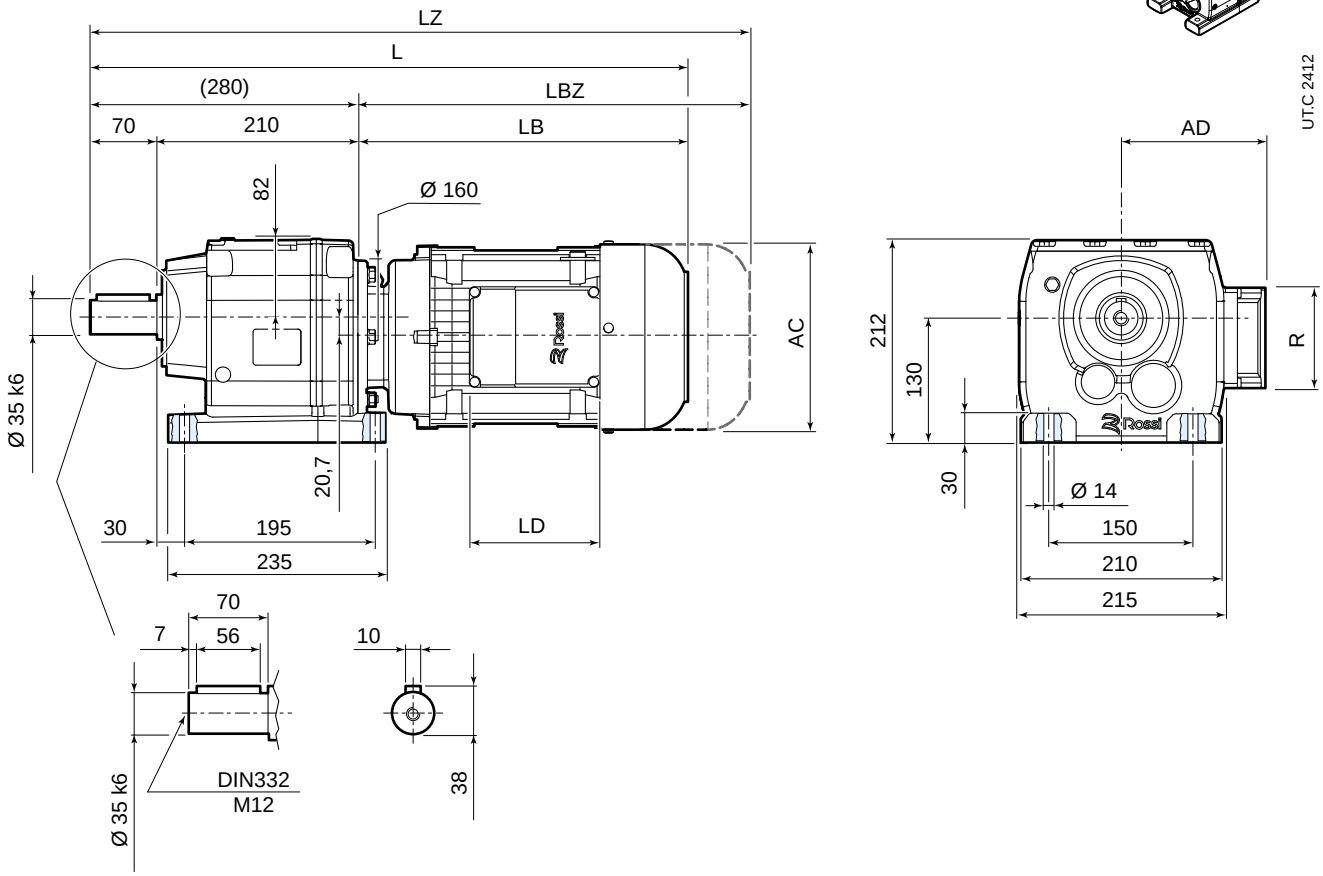

85 74 208

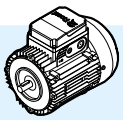

	63	71	80	90S [2]	90L	100	112	132S [3]	132M
AC	123	138	156	176	176	194	218	257	257
AD	95	112	121	141	141	151	163	194	194
LB	205	231	260	283	313	345	383	439	499
LBZ	260	293	329	362	392	440	482	547	607
L [1]	485	511	540	563	593	625	663	719	779
LZ [1]	540	573	609	642	672	720	762	827	887
LD	103	103	103	136	136	136	136	190	190
R	86	86	86	106	106	106	106	148	148

[1] See also pages 80, 81.
[2] For motors HB3-HB3Z 90S 2, HB3-HB3Z 90S 4 dimensions as motor size
[3] For motors HB3-HB3Z 132 SB 2, HB3-HB3Z 132SC 2, HB3-HB3Z 132S 4 dimensions as motor size 132M

iC 67...FE

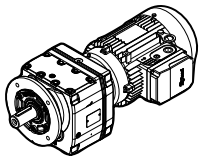

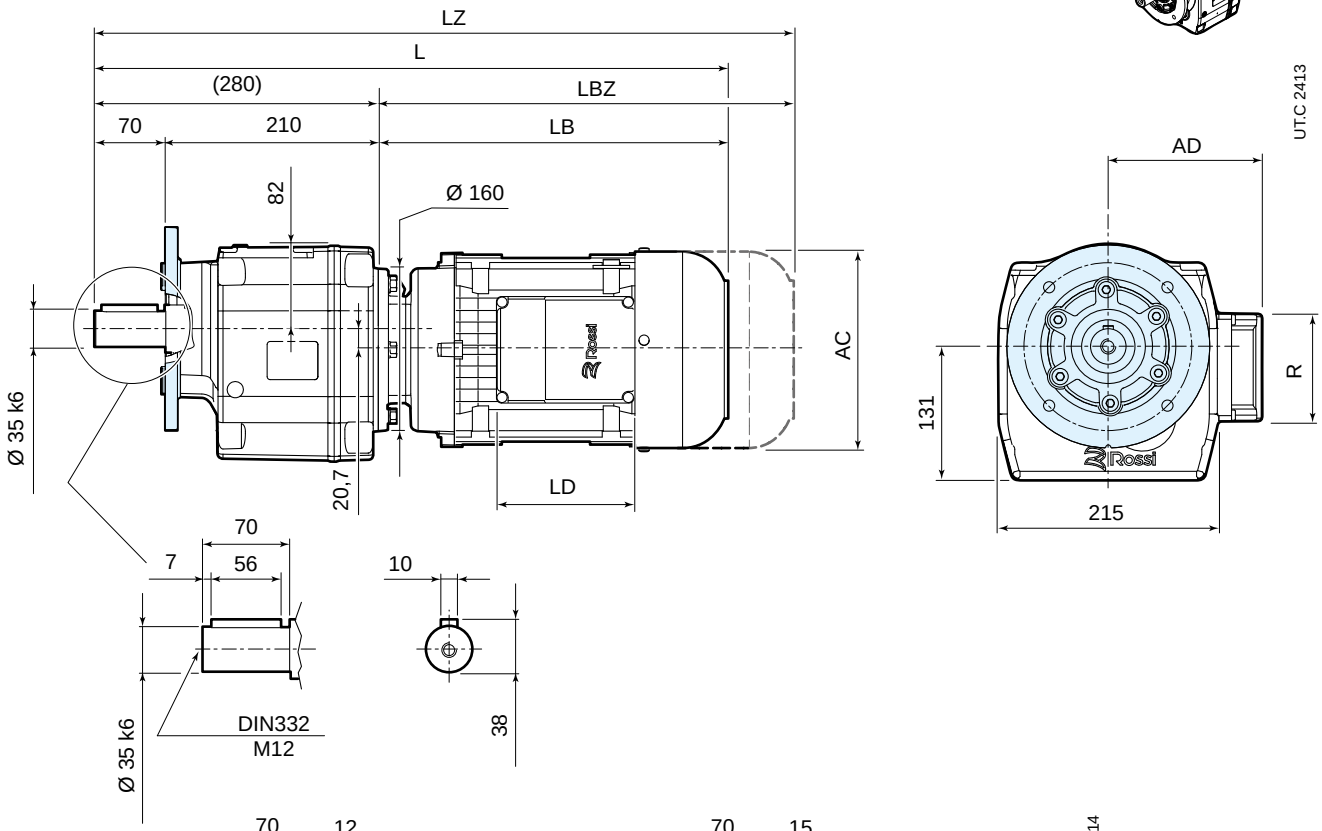

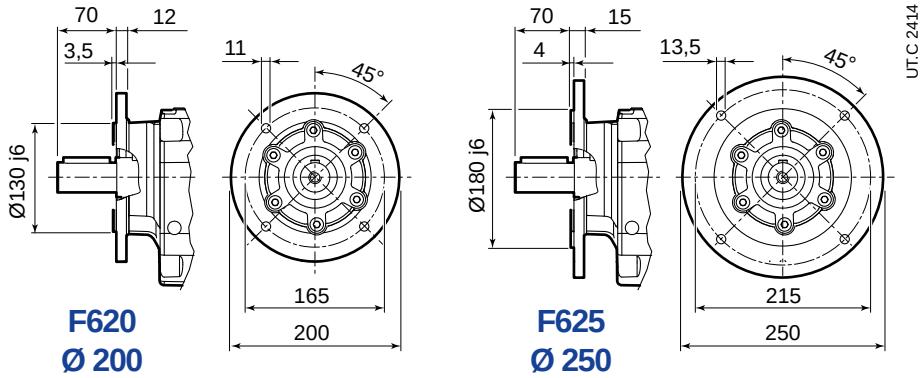

F620
Ø 200

F625
Ø 250

85 74 208

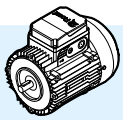

	63	71	80	90S [2]	90L	100	112	132S [3]	132M
AC	123	138	156	176	176	194	218	257	257
AD	95	112	121	141	141	151	163	194	194
LB	205	231	260	283	313	345	383	439	499
LBZ	260	293	329	362	392	440	482	547	607
L [1]	485	511	540	563	593	625	663	719	779
LZ [1]	540	573	609	642	672	720	762	827	887
LD	103	103	103	136	136	136	136	190	190
R	86	86	86	106	106	106	106	148	148

[1] See also pages 80, 81.
[2] For motors HB3-HB3Z 90S 2, HB3-HB3Z 90S 4 dimensions as motor size
[3] For motors HB3-HB3Z 132 SB 2, HB3-HB3Z 132SC 2, HB3-HB3Z 132S 4 dimensions as motor size 132M

10.6

iC 77...PE

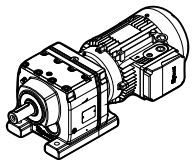

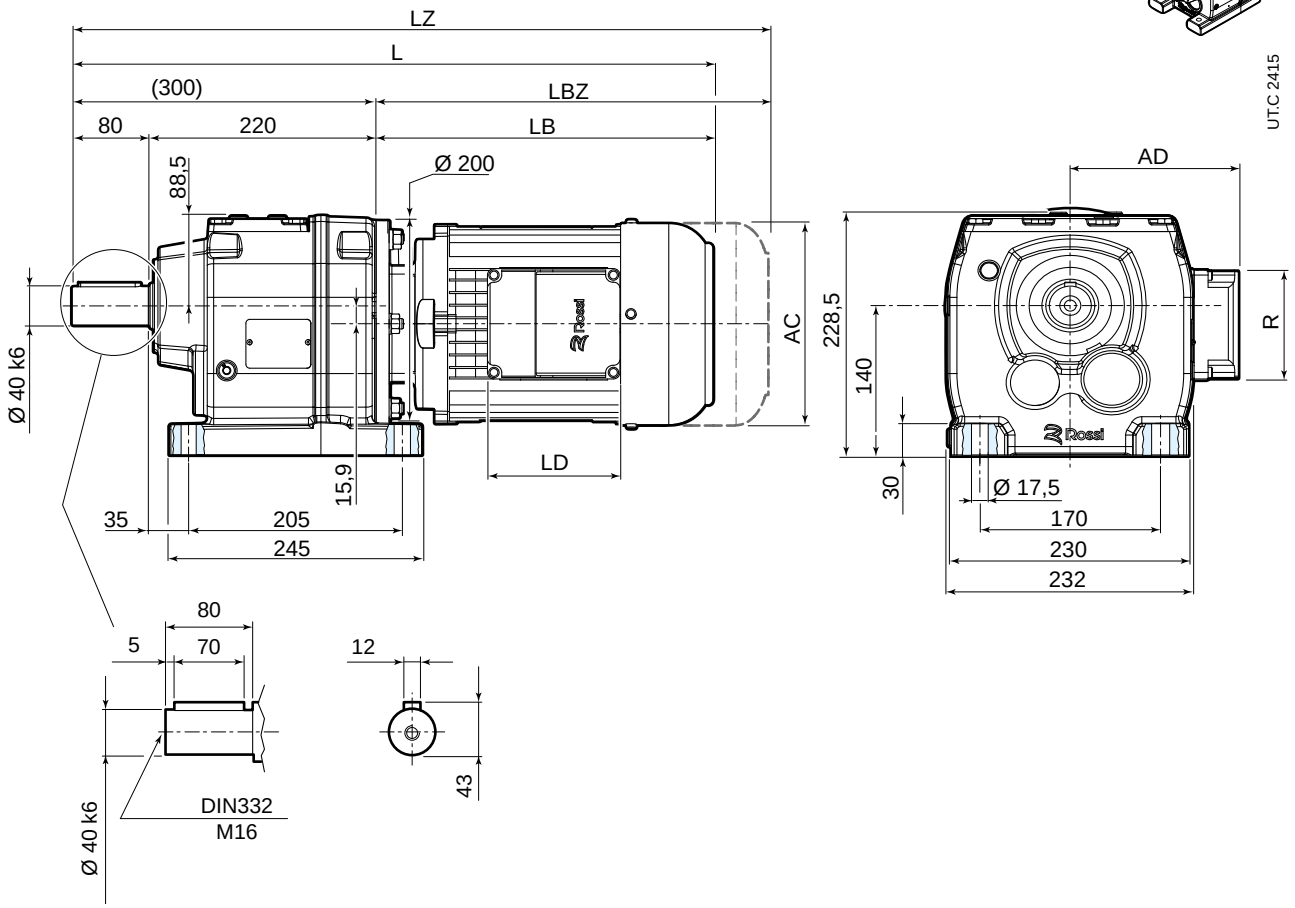

85 74 208

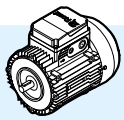

	63	71	80	90S [2]	90L	100	112	132S [3]	132M
AC	123	138	156	176	176	194	218	257	257
AD	95	112	121	141	141	151	163	194	194
LB	199	225	254	276	306	339	377	433	493
LBZ	254	287	323	355	385	434	476	541	601
L [1]	499	525	554	576	606	639	677	733	793
LZ [1]	554	587	623	655	685	734	776	841	901
LD	103	103	103	136	136	136	136	190	190
R	86	86	86	106	106	106	106	148	148

[1] See also pages 80, 81.
[2] For motors HB3-HB3Z 90S 2, HB3-HB3Z 90S 4 dimensions as motor size
[3] For motors HB3-HB3Z 132 SB 2, HB3-HB3Z 132SC 2, HB3-HB3Z 132S 4 dimensions as motor size 132M

iC 77...FE

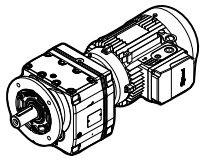

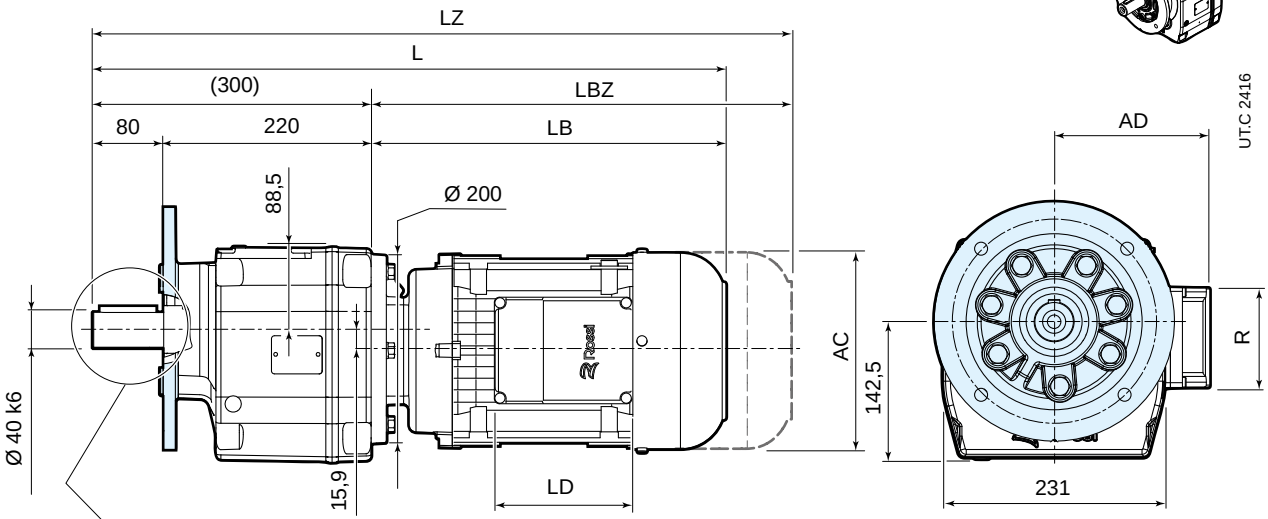

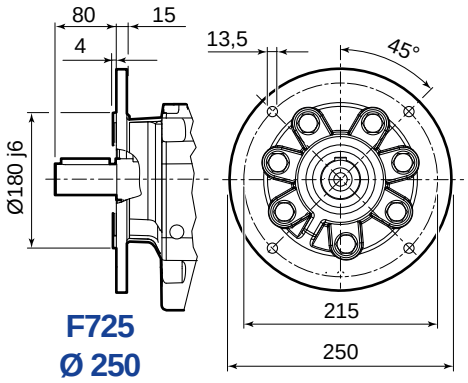

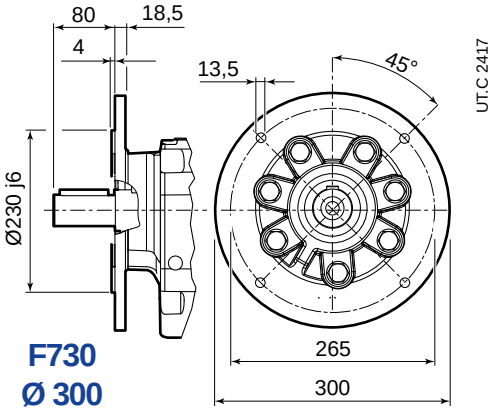

85 74 208

	63	71	80	90S [2]	90L	100	112	132S [3]	132M
AC	123	138	156	176	176	194	218	257	257
AD	95	112	121	141	141	151	163	194	194
LB	199	225	254	276	306	339	377	433	493
LBZ	254	287	323	355	385	434	476	541	601
L [1]	499	525	554	576	606	639	677	733	793
LZ [1]	554	587	623	655	685	734	776	841	901
LD	103	103	103	136	136	136	136	190	190
R	86	86	86	106	106	106	106	148	148

[1] See also pages 80, 81.
[2] For motors HB3-HB3Z 90S 2, HB3-HB3Z 90S 4 dimensions as motor size
[3] For motors HB3-HB3Z 132 SB 2, HB3-HB3Z 132SC 2, HB3-HB3Z 132S 4 dimensions as motor size 132M

10.7

iC 87...PE

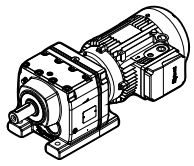

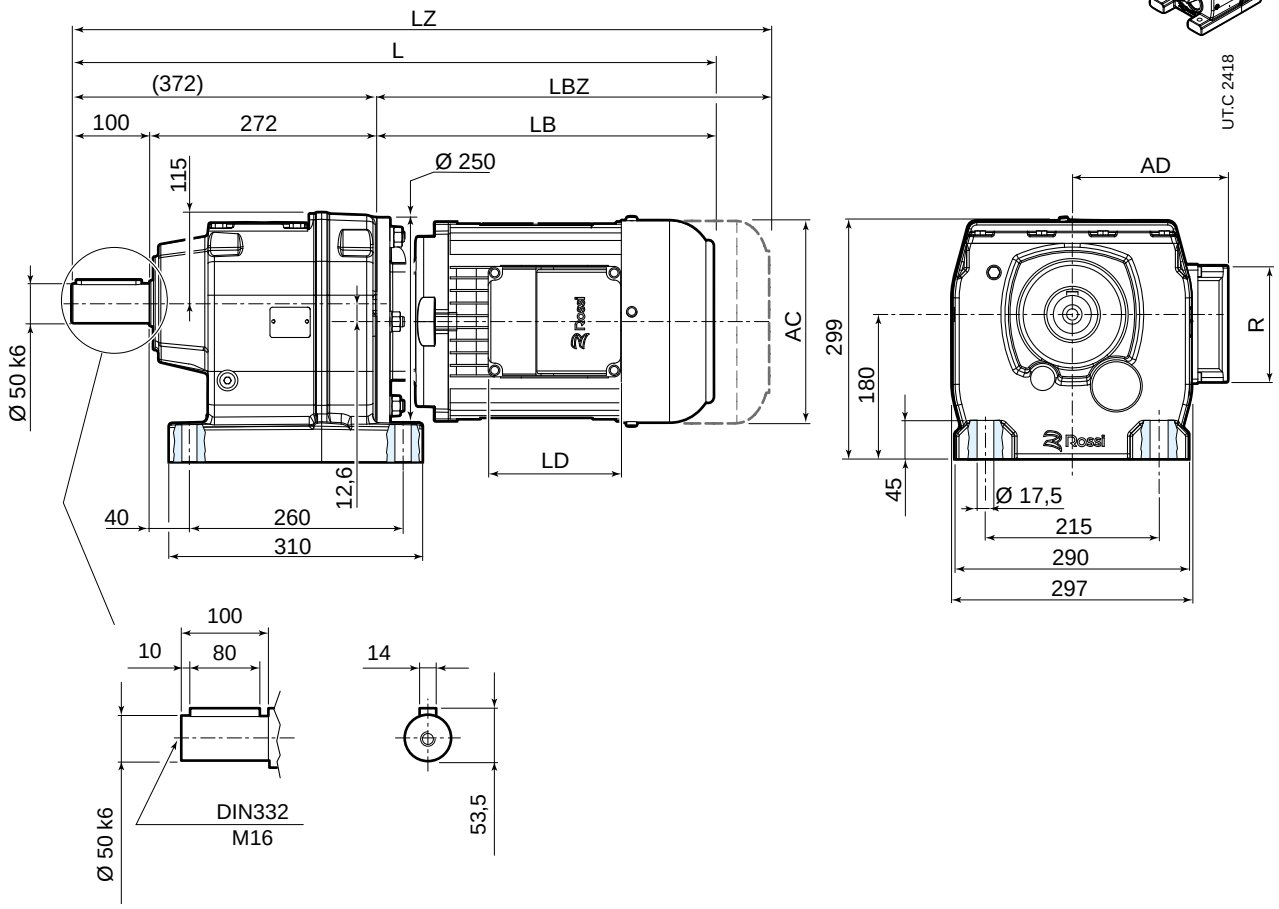

85 74 208

	80	90S [2]	90L	100	112	132S [3]	132M
AC	156	176	176	194	218	257	257
AD	121	141	141	151	163	194	194
LB	249	272	302	334	372	428	488
LBZ	318	351	381	429	471	536	596
L [1]	621	644	674	706	744	800	860
LZ [1]	690	723	753	801	843	908	968
LD	103	136	136	136	136	190	190
R	86	106	106	106	106	148	148

[1] See also pages 80, 81.
[2] For motors HB3-HB3Z 90S 2, HB3-HB3Z 90S 4 dimensions as motor size
[3] For motors HB3-HB3Z 132 SB 2, HB3-HB3Z 132SC 2, HB3-HB3Z 132S 4 dimensions as motor size 132M

iC 87...FE

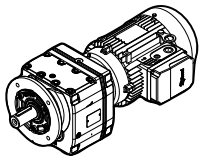

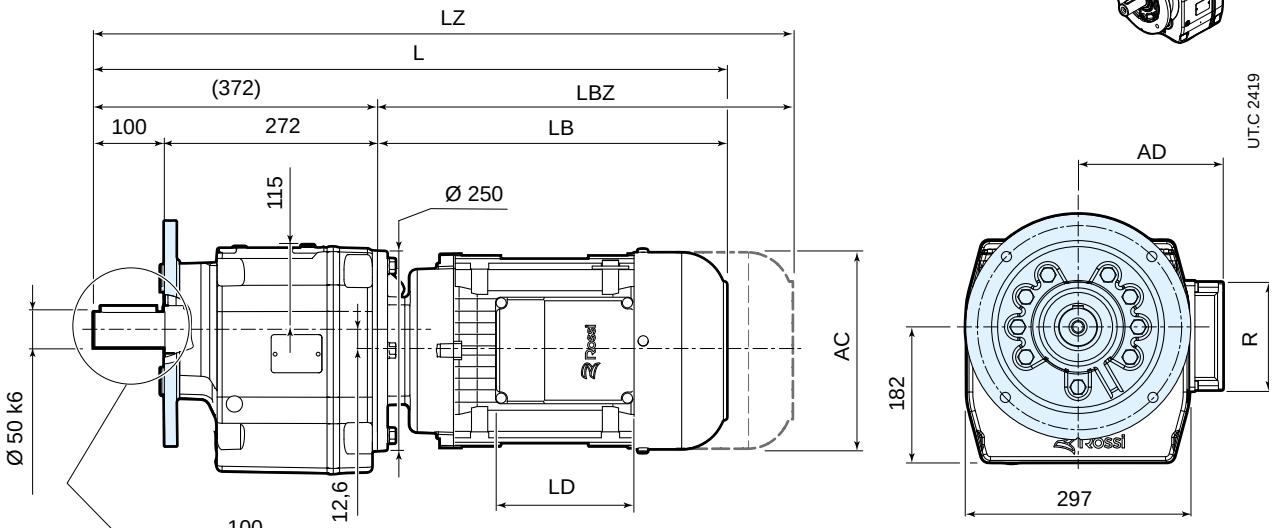

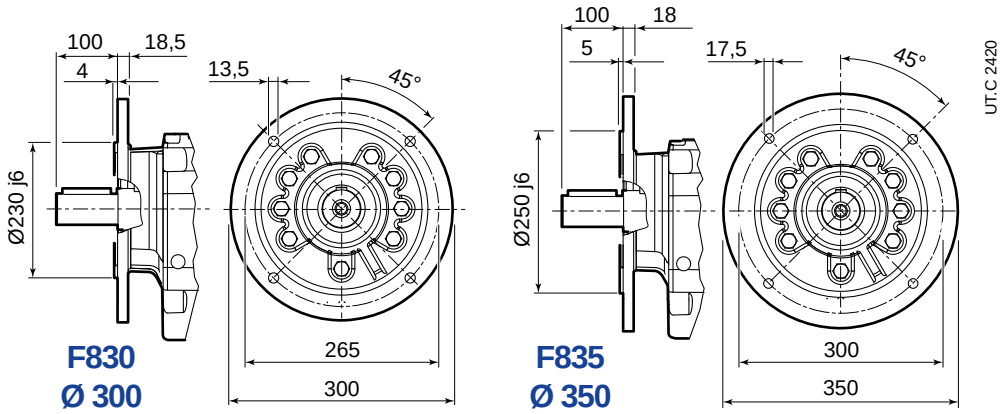

F830
Ø 300

F835
Ø 350

85 74 208

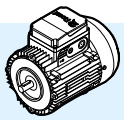

	80	90S [2]	90L	100	112	132S [3]	132M
AC	156	176	176	194	218	257	257
AD	121	141	141	151	163	194	194
LB	249	272	302	334	372	428	488
LBZ	318	351	381	429	471	536	596
L [1]	621	644	674	706	744	800	860
LZ [1]	690	723	753	801	843	908	968
LD	103	136	136	136	136	190	190
R	86	106	106	106	106	148	148

[1] See also pages 80, 81.
[2] For motors HB3-HB3Z 90S 2, HB3-HB3Z 90S 4 dimensions as motor size
[3] For motors HB3-HB3Z 132 SB 2, HB3-HB3Z 132SC 2, HB3-HB3Z 132S 4 dimensions as motor size 132M

10.8

iC 97...PE

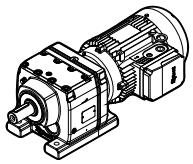

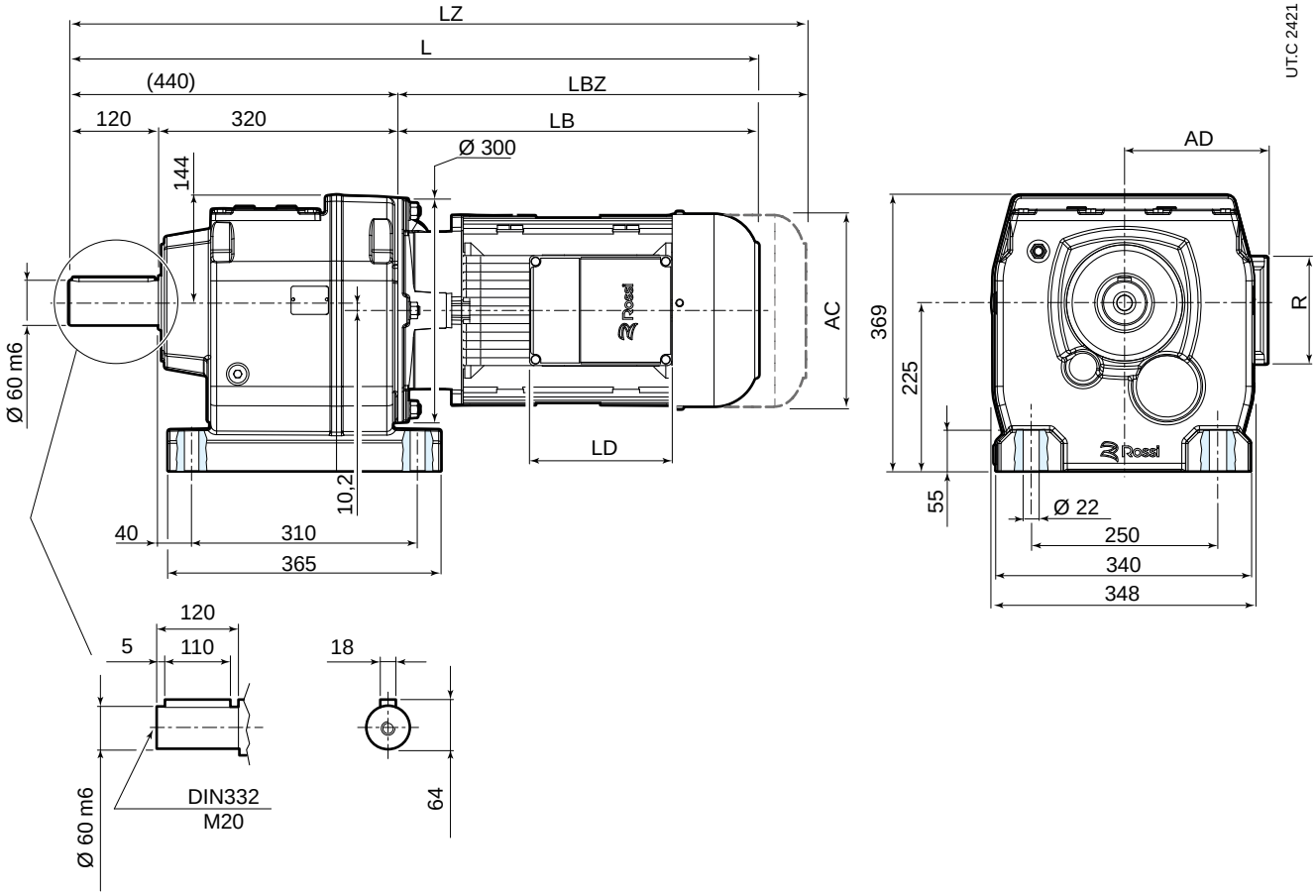

85 74 208

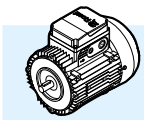

	80	90S [2]	90L	100	112	132S [3]	132M
AC	156	176	176	194	218	257	257
AD	121	141	141	151	163	194	194
LB	242	264	294	327	364	423	483
LBZ	311	343	373	422	463	531	591
L [1]	682	704	734	767	804	863	923
LZ [1]	751	783	813	862	903	971	1031
LD	103	136	136	136	136	190	190
R	86	106	106	106	106	148	148

[1] See also pages 80, 81.
[2] For motors HB3-HB3Z 90S 2, HB3-HB3Z 90S 4 dimensions as motor size
[3] For motors HB3-HB3Z 132 SB 2, HB3-HB3Z 132SC 2, HB3-HB3Z 132S 4 dimensions as motor size 132M

iC 97...FE

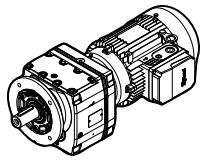

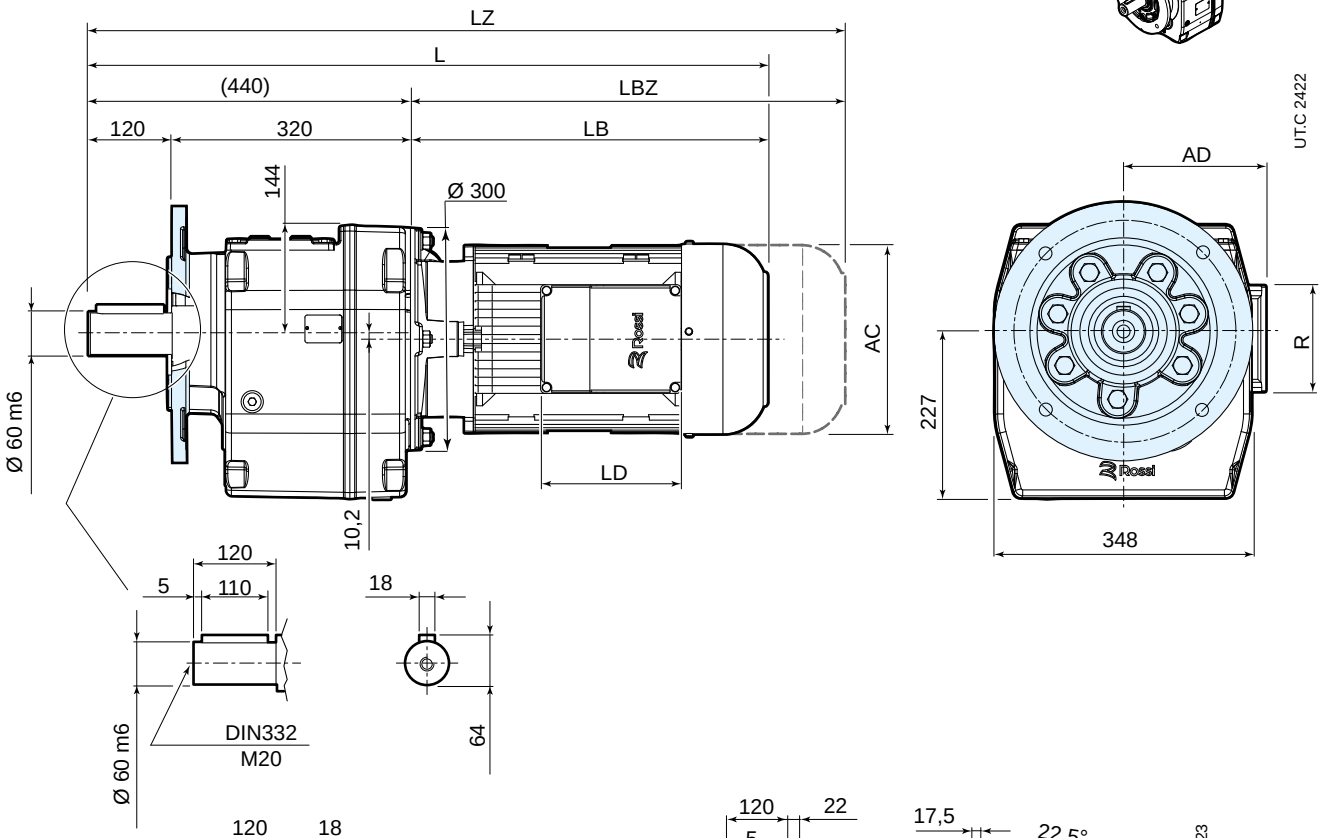

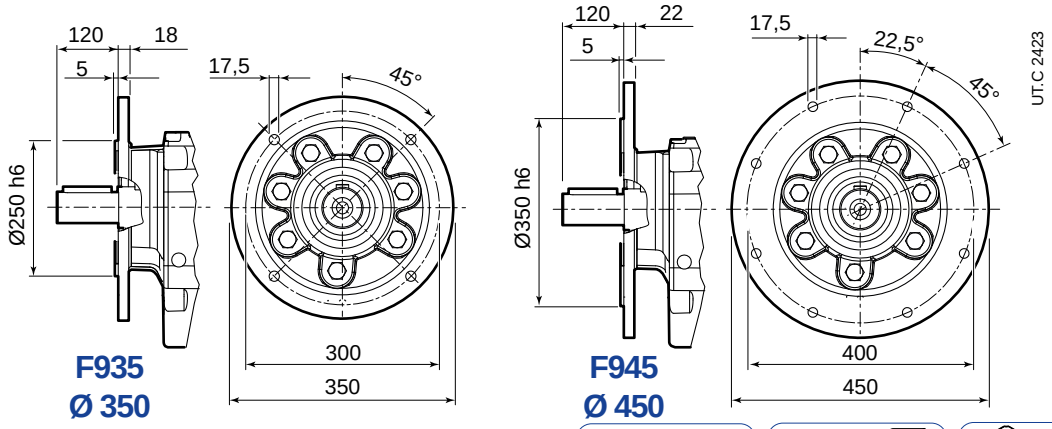

F935
Ø 350

F945
Ø 450

85 74 208

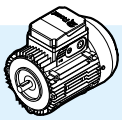

	80	90S [2]	90L	100	112	132S [3]	132M
AC	156	176	176	194	218	257	257
AD	121	141	141	151	163	194	194
LB	242	264	294	327	364	423	483
LBZ	311	343	373	422	463	531	591
L [1]	682	704	734	767	804	863	923
LZ [1]	751	783	813	862	903	971	1031
LD	103	136	136	136	136	190	190
R	86	106	106	106	106	148	148

[1] See also pages 80, 81.
[2] For motors HB3-HB3Z 90S 2, HB3-HB3Z 90S 4 dimensions as motor size
[3] For motors HB3-HB3Z 132 SB 2, HB3-HB3Z 132SC 2, HB3-HB3Z 132S 4 dimensions as motor size 132M

11

Bevel helical Selection tables - iO

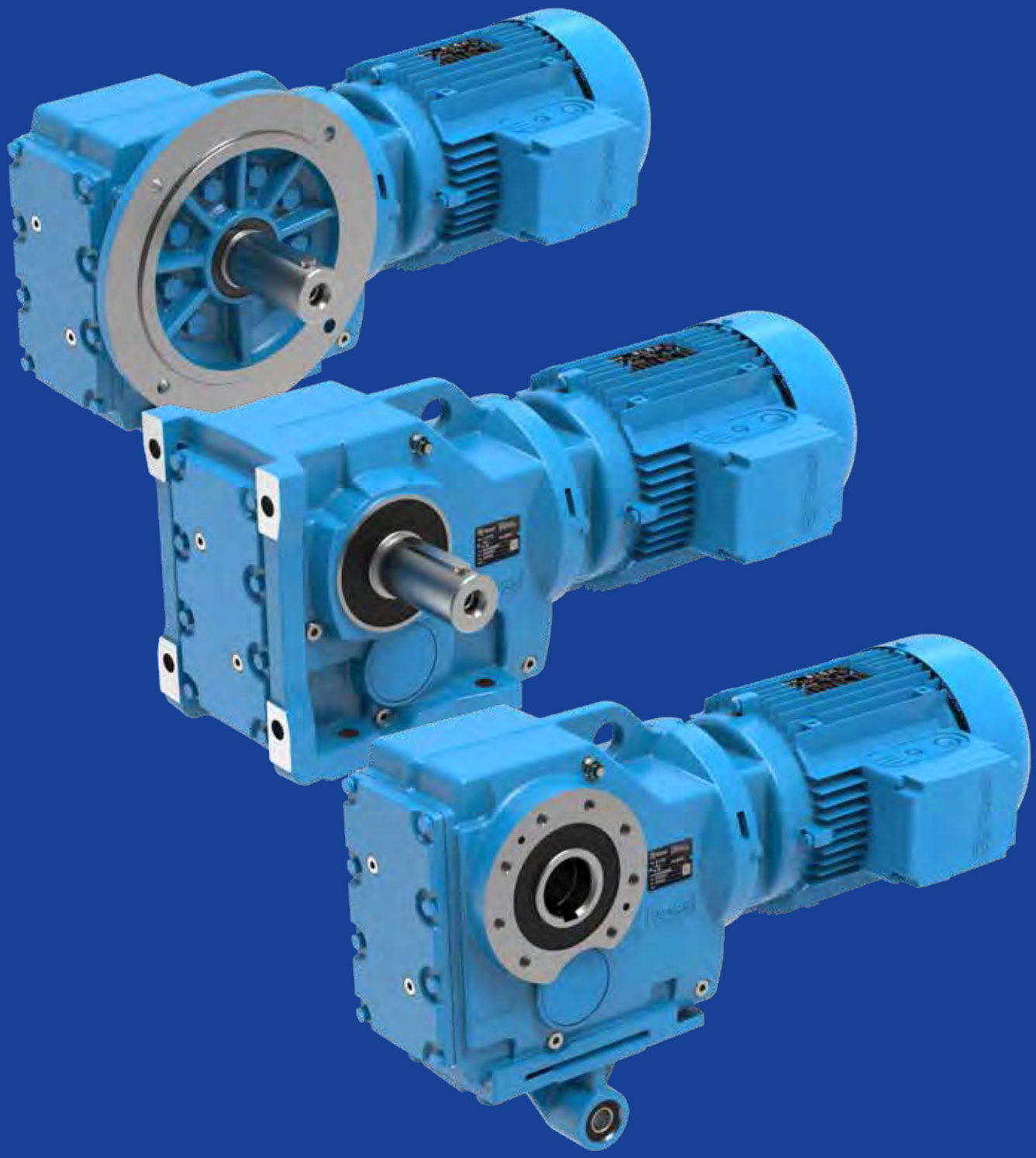

Section contents

11.1	Possible geometrical combinations	152
11.1.1	General	152
11.1.2	Key	152
11.2	Geometrical coupling tables	153
11.3	Selection tables [kW]	160

11.1

Possible geometrical combinations

11.1.1 General

The tables in the following pages show the geometrical coupling possibilities with HB 4 poles motors, according to train of gears (2 or 3 stages) and transmission ratio.
Also the low speed shaft rotation speed n_2, calculated according to a nominal input speed equal to n_1 = 1400 min^{-1}, are shown.
The values of the nominal torque at the low speed shaft M_{N2} and of the permissible radial load F_{r2} acting on the center line are also referred to this speed.

At the time of selection, it is necessary to evaluate the actual operating conditions in relation to the actual power of the applied motor as indicated in ch. 6.

11.1.2 Key

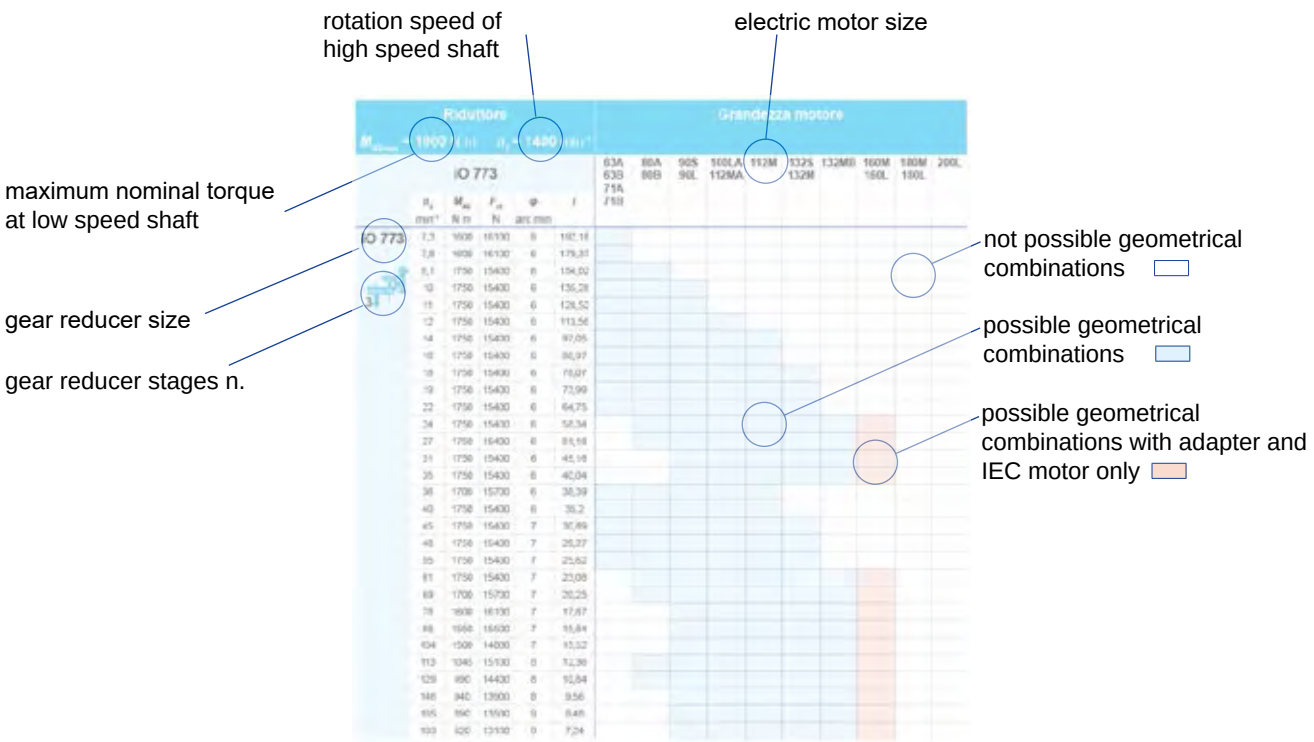

where

- n_2 low speed shaft rotation speed
- M_{N2} nominal torque at low speed shaft
- F_{r2} permissible radial load acting on center line of low speed shaft
  (at speed n_2 and with torque M_{N2} indicated in the table - valid only for foot mounted gearmotor design)
- φ reduced backlash, referred to low speed shaft
  (tolerance ± 2 arc min - if value is not specified, the reduced backlash option is not available)
- i transmission ratio

Gear reducer M_{N2max} = 224 N m n_1 = 1400 min^{-1}						Motor size									
iO 373						63A 63B 71A 71B	80A 80B	90S 90L	100LA 112MA	112M	132S 132M	132MB	160M 160L	180M 180L	200L
	n_2 min^{-1}	M_{N2} N m	F_{r2} N	φ arc min	i										
iO 373	13	224	5640	7	106,38										
	14	224	5640	7	97,81										
	17	224	5640	7	83,69										
	19	224	5520	7	72,54										
3	21	224	5360	7	67,8										
	24	224	5020	7	58,6										
	28	224	4660	7	49,79										
	31	224	4420	7	44,46										
	37	224	4100	7	37,97										
	39	224	3970	8	35,57										
	47	224	3650	8	29,96										
	49	224	3580	9	28,83										
	56	224	3330	9	24,99										
	60	315	3260	9	23,36										
	69	205	3110	9	20,19										
	82	200	2900	9	17,15										
	91	195	2780	9	15,31										
	107	185	2650	9	13,08										
	115	180	2600	12	12,14										
	133	180	2410	13	10,49										
	157	180	2200	13	8,91										
	176	175	2110	13	7,96										
	206	170	1980	13	6,8										
	220	160	1950	13	6,37										
	261	150	1810	14	5,36										

Gear reducer M_{N2max} = 450 N m n_1 = 1400 min^{-1}						Motor size									
iO 473						63A 63B 71A 71B	80A 80B	90S 90L	100LA 112MA	112M	132S 132M	132MB	160M 160L	180M 180L	200L
	n_2 min^{-1}	M_{N2} N m	F_{r2} N	φ arc min	i										
iO 473	11	450	5920	7	131,87 (1)										
	12	450	5920	7	121,48 (1)										
	13	450	5920	7	104,37										
3	15	450	5920	7	90,86										
	16	450	5920	7	85,12 (1)										
	19	450	5920	7	75,2 (1)										
	20	450	5920	7	69,84										
	22	450	5920	7	63,3 (1)										
	25	450	5920	7	56,83										
	29	450	5920	7	48,95 (1)										
	30	450	5920	7	46,03 (1)										
	35	450	5920	7	39,61										
	40	450	5920	7	35,39										
	45	450	5700	8	31,3										
	48	450	5520	8	29,32										
	54	450	5170	8	25,91										
	58	450	4970	8	24,06										
	64	450	4710	8	21,81										
	72	450	4440	8	19,58										
	83	425	4220	8	16,86										
	88	425	4080	8	15,86										
	103	400	3890	8	13,65										
	115	385	3720	9	12,19										
	119	280	4060	11	11,77										
	133	280	3830	11	10,56										
	154	280	3540	11	9,1										
	164	270	3500	11	8,56										
	190	250	3380	11	7,36										
	213	240	3270	12	6,58										
	241	230	3140	12	5,81										

(1) Finite transmission ratio *i*

Gear reducer M_{N2max} = 670 N m n_1 = 1400 min^{-1}						Motor size									
iO 573						63A 63B 71A 71B	80A 80B	90S 90L	100LA 112MA	112M	132S 132M	132MB	160M 160L	180M 180L	200L
	n_2 min^{-1}	M_{N2} N m	F_{r2} N	φ arc min	i										
iO 573 3	9,6	670	7630	6	145,14 (1)										
	11	670	7630	6	123,85										
	13	670	7630	6	108,29										
	14	670	7630	6	102,88 (1)										
	16	670	7630	6	90,26 (1)										
	18	670	7630	6	76,56 (1)										
	20	670	7630	6	69,12										
	23	670	7630	6	60,81 (1)										
	24	670	7630	6	57,42 (1)										
	29	670	7630	6	48,89										
	32	670	7630	7	44,43										
	36	670	7630	7	38,49										
	39	670	7630	7	35,7										
	46	670	7300	7	30,28										
	51	670	6930	7	27,34										
	58	670	6480	7	24,05										
	62	670	6280	7	22,71										
	72	650	5910	7	19,34										
	80	615	5740	8	17,57										
	92	600	5430	8	15,22										
	106	580	5190	8	13,25										
	117	460	5150	10	11,92										
	124	460	4990	10	11,26										
	146	450	4650	10	9,59										
	161	430	4520	10	8,71										
	185	400	4360	11	7,55										
	213	375	4180	11	6,57										

(1) Finite transmission ratio *i*

Gear reducer						Motor size									
M_{N2max} = 925 N m n_1 = 1400 min^{-1}															
iO 673						63A 63B 71A 71B	80A 80B	90S 90L	100LA 112MA	112M	132S 132M	132MB	160M 160L	180M 180L	200L
	n_2 min^{-1}	M_{N2} N m	F_{r2} N	φ arc min	i										
iO 673	9,7	925	10300	7	144,79 (1)										
	11	915	10300	7	123,54										
	13	910	10300	7	108,03										
3	14	910	10300	7	102,62										
	16	905	10300	7	90,04										
	18	900	10300	7	76,37										
	20	900	10300	7	68,95										
	23	895	10300	7	60,66										
	24	895	10300	7	57,28										
	29	890	10300	7	48,77										
	32	885	10300	7	44,32										
	36	880	10500	7	38,39										
	39	880	10300	8	35,62										
	46	875	10300	8	30,22										
	51	875	10300	8	27,28										
	58	870	10500	8	24										
	62	870	10700	8	22,66										
	73	850	10800	8	19,3										
	80	820	11000	8	17,54										
	92	765	11300	8	15,19										
	106	670	11500	8	13,22										
	112	530	12300	9	12,48										
	132	500	11800	9	10,63										
	145	480	11500	10	9,66										
	167	440	11100	10	8,37										
	192	420	10700	10	7,28										

iO

Gear reducer						Motor size									
M_{N2max} = 1750 N m n_1 = 1400 min^{-1}															
iO 773						63A 63B 71A 71B	80A 80B	90S 90L	100LA 112MA	112M	132S 132M	132MB	160M 160L	180M 180L	200L
	n_2 min^{-1}	M_{N2} N m	F_{r2} N	φ arc min	i										
iO 773	7,3	1600	16100	6	192,18										
	7,8	1600	16100	6	179,37										
	9,1	1750	15400	6	154,02										
3	10	1750	15400	6	135,28										
	11	1750	15400	6	128,52										
	12	1750	15400	6	113,56										
	14	1750	15400	6	97,05										
	16	1750	15400	6	88,97										
	18	1750	15400	6	78,07										
	19	1750	15400	6	73,99										
	22	1750	15400	6	64,75										
	24	1750	15400	6	58,34										
	27	1750	15400	6	51,18										
	31	1750	15400	6	45,16										
	35	1750	15400	6	40,04										
	36	1700	15700	6	38,39										
	40	1750	15400	6	35,2										
	45	1750	15400	7	30,89										
	48	1750	15400	7	29,27										
	55	1750	15400	7	25,62										
	61	1750	15400	7	23,08										
	69	1700	15700	7	20,25										
	78	1600	16100	7	17,87										
	88	1550	15500	7	15,84										
	104	1500	14800	7	13,52										
	113	1045	15100	8	12,36										
	129	990	14400	8	10,84										
	146	940	13900	8	9,56										
	165	890	13500	9	8,48										
	193	820	13100	9	7,24										

Gear reducer M_{N2max} = 3000 N m n_1 = 1400 min^{-1}						Motor size									
iO 873	n_2 min^{-1}	M_{N2} N m	F_{r2} N	φ arc min	i	63A 63B 71A 71B	80A 80B	90S 90L	100LA 112MA	112M	132S 132M	132MB	160M 160L	180M 180L	200L
iO 873	7,1	3000	27300	6	197,37										
	8	3000	27300	6	174,19										
	8,5	3000	27300	6	164,34 (1)										
	9,5	3000	27300	6	147,32 (1)										
3	11	3000	27300	6	126,91 (1)										
	12	3000	27300	6	115,82										
	14	3000	27300	6	102,71 (1)										
	16	3000	27300	6	86,34										
	18	3000	27300	6	79,34										
	20	3000	27300	6	70,46										
	22	3000	26200	6	63 (1)										
	25	3000	25000	6	56,64										
	28	3000	23500	6	49,16										
	32	2900	22800	6	44,02										
	38	2800	21400	6	36,52 (1)										
	45	3000	19200	7	31,39										
	50	2900	18500	7	27,88										
	56	2800	18000	7	24,92										
	62	2570	17900	7	22,41										
	72	2570	16800	7	19,45										
	80	2430	16300	7	17,42										
	88	1970	16000	7	16										
	97	2360	15300	7	14,45										
	111	2240	14800	7	12,56										
	125	1700	14900	7	11,17										
	140	1700	14200	7	10										
	169	1550	13500	7	8,29										
	194	1450	13200	8	7,21										

(1) Finite transmission ratio *i*

Gear reducer M_{N2max} = 4870 N m n_1 = 1400 min^{-1}						Motor size									
iO 973	n_2 min^{-1}	M_{N2} N m	F_{r2} N	φ arc min	i	63A 63B 71A 71B	80A 80B	90S 90L	100LA 112MA	112M	132S 132M	132MB	160M 160L	180M 180L	200L
iO 973 3	8	4870	40000	7	176,05 (1)										
	9,1	4870	40000	7	153,21 (1)										
	10	4870	40000	7	140,28										
	11	4870	40000	7	123,93 (1)										
	13	4870	40000	7	105,13										
	14	4870	40000	7	96,8										
	16	4870	38800	7	86,52										
	18	4870	37100	7	77,89 (1)										
	20	4870	35600	7	70,54										
	22	4870	33800	7	62,55										
	25	4870	32300	7	56,55										
	29	4870	30000	7	47,93 (1)										
	33	4870	28300	7	41,87										
	37	4870	27100	8	38,3										
	41	4870	25700	8	34,23										
	45	4870	24500	8	30,82										
	50	4870	23300	8	27,91										
	57	4870	22000	8	24,75										
	63	4870	20900	8	22,37										
	74	4870	19100	8	18,96										
	85	4870	17800	8	16,56										
	101	4580	16100	8	13,85										
	117	4270	16200	8	11,99										
	134	3130	16400	10	10,41										
	161	2880	15800	10	8,71										

(1) Finite transmission ratio *i*

11.3

Selection tables [kW]

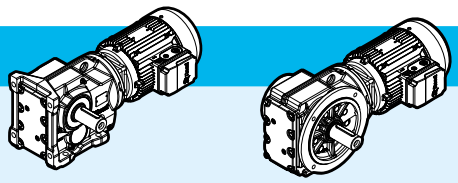

n_2 min^{-1}	M_2 N m	i	F_{r2} N	fs			kg foot HB	kg foot HBZ	kg flange HB	kg flange HBZ	p.
P_1 = 0,12 kW											
6,3	182	144,79 (1)	13000	5,1	iO 673 – HB2 63 B 6 B16B	3	34	36	40	41	195
6,3	183	145,14 (1)	9660	3,7	iO 573 – HB2 63 B 6 B16B	3	30	32	37	38	192
7,3	156	123,85	9740	4,3							
8,4	136	108,29	9800	4,9							
8,8	130	102,88 (1)	9820	5,2							
10	114	90,26 (1)	9870	5,9							
12	96	76,56 (1)	9920	6,9							
9,4	121	145,14 (1)	9870	5,5	iO 573 – HB2 63 A 4 B16B	3	29	31	36	38	192
11	104	123,85	9910	6,5							
13	91	108,29	9950	7,4							
13	86	102,88 (1)	9960	7,8							
15	76	90,26 (1)	9990	8,9							
6,9	166	131,87 (1)	7900	2,7	iO 473 – HB2 63 B 6 B16B	3	23	25	25	27	189
7,5	153	121,48 (1)	7960	2,9							
8,7	131	104,37	8050	3,4							
10	110	131,87 (1)	8140	4,1	iO 473 – HB2 63 A 4 B16B	3	22	24	25	27	189
11	102	121,48 (1)	8160	4,4							
8,6	134	106,38	5750	1,65	iO 373 – HB2 63 B 6 B12B	3	19	20	21	22	186
9,3	123	97,81	5860	1,8							
11	105	83,69	6030	2,1							
13	91	72,54	6160	2,5							
13	89	106,38	6220	2,5	iO 373 – HB2 63 A 4 B12B	3	18	20	20	22	186
14	82	97,81	6290	2,7							
16	70	83,69	6400	3,2							
19	61	72,54	6480	3,7							
20	57	67,8	6520	3,9							
P_1 = 0,18 kW											
6,3	274	144,79 (1)	13000	3,4	iO 673 – HB2 71 A 6 B16B	3	36	38	41	44	195
7,4	233	123,54	13000	4							
8,4	204	108,03	13000	4,5							
8,9	194	102,62	13000	4,8							
9,4	183	144,79 (1)	13000	5,1	iO 673 – HB2 63 B 4 B16B	3	34	36	40	41	195
11	156	123,54	13000	5,9							
13	137	108,03	13000	6,7							

(1) Finite transmission ratio *i*

iO

P_1 = 0,18 kW

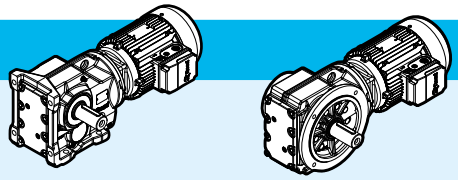

n_2 min^{-1}	M_2 N m	i	F_{r2} N	fs			kg foot HB	kg foot HBZ	kg flange HB	kg flange HBZ	p.
6,3	274	145,14 (1)	9380	2,4	**iO 573 – HB2 71 A 6 B16B**	3	31	34	38	41	192
7,3	234	123,85	9520	2,9							
8,4	205	108,29	9620	3,3							
8,8	194	102,88 (1)	9650	3,4							
10	171	90,26 (1)	9720	3,9							
9,4	183	145,14 (1)	9690	3,7	**iO 573 – HB2 63 B 4 B16B**	3	30	32	37	38	192
11	157	123,85	9770	4,3							
13	137	108,29	9820	4,9							
13	130	102,88 (1)	9840	5,2							
15	114	90,26 (1)	9890	5,9							
18	97	76,56 (1)	9930	6,9							
6,9	249	131,87 (1)	7480	1,8	**iO 473 – HB2 71 A 6 B16B**	3	24	27	27	30	189
7,5	229	121,48 (1)	7600	1,95							
8,7	197	104,37	7790	2,3							
10	172	90,86	7920	2,6							
11	161	85,12 (1)	7960	2,8							
10	167	131,87 (1)	7940	2,7	**iO 473 – HB2 63 B 4 B16B**	3	23	25	25	27	189
11	154	121,48 (1)	8000	2,9							
13	132	104,37	8080	3,4							
15	115	90,86	8130	3,9							
16	108	85,12 (1)	8150	4,2							
8,6	201	106,38	5210	1,1	**iO 373 – HB2 71 A 6 B12B**	3	20	23	22	25	186
9,3	185	97,81	5360	1,2							
11	158	83,69	5600	1,4							
13	137	72,54	5790	1,65							
13	134	106,38	5820	1,65	**iO 373 – HB2 63 B 4 B12B**	3	19	20	21	22	186
14	124	97,81	5920	1,8							
16	106	83,69	6080	2,1							
19	92	72,54	6200	2,4							
20	86	67,8	6260	2,6							
23	74	58,6	6210	3							
27	63	49,79	5950	3,6							
31	56	44,46	5770	4							
36	48	37,97	5520	4,7							

P_1 = 0,25 kW

4,7	510	192,18	19700	3,1	**iO 773 – HB2 71 B 6 B20B**	3	55	58	63	66	198
5,0	476	179,37	19800	3,4							
5,8	409	154,02	19900	4,3							
6,7	359	135,28	19900	4,9							
6,2	384	144,79 (1)	12900	2,4	**iO 673 – HB2 71 B 6 B16B**	3	37	39	42	45	195
7,3	328	123,54	13000	2,8							
8,3	287	108,03	13000	3,2							
8,8	272	102,62	13000	3,4							

(1) Finite transmission ratio *i*

P_1 = 0,25 kW

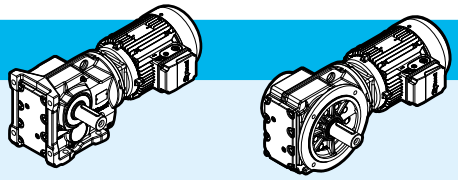

n_2 min^{-1}	M_2 N m	i	F_{r2} N	fs			kg foot HB	kg foot HBZ	kg flange HB	kg flange HBZ	p.
9,7	247	144,79 (1)	13000	3,7	**iO 673 – HB2 71 A 4 B16B**	3	35	38	41	43	195
11	211	123,54	13000	4,4							
13	184	108,03	13000	4,9							
14	175	102,62	13000	5,2							
6,2	385	145,14 (1)	8970	1,75	**iO 573 – HB2 71 B 6 B16B**	3	32	35	39	41	192
7,3	329	123,85	9200	2							
8,3	287	108,29	9350	2,3							
8,7	273	102,88 (1)	9400	2,5							
10,0	239	90,26 (1)	9520	2,8							
12	203	76,56 (1)	9630	3,3							
9,6	248	145,14 (1)	9480	2,7	**iO 573 – HB2 71 A 4 B16B**	3	31	34	38	40	192
11	211	123,85	9600	3,2							
13	185	108,29	9680	3,6							
14	175	102,88 (1)	9710	3,8							
16	154	90,26 (1)	9770	4,4							
18	131	76,56 (1)	9840	5,1							
6,8	350	131,87 (1)	6620	1,3	**iO 473 – HB2 71 B 6 B16B**	3	25	28	28	30	189
7,4	322	121,48 (1)	6900	1,4							
8,6	277	104,37	7290	1,65							
9,9	241	90,86	7550	1,85							
11	226	85,12 (1)	7640	2							
11	225	131,87 (1)	7630	2	**iO 473 – HB2 71 A 4 B16B**	3	24	27	27	29	189
12	207	121,48 (1)	7740	2,2							
13	178	104,37	7890	2,5							
15	155	90,86	7990	2,9							
16	145	85,12 (1)	8020	3,1							
11	222	83,69	5040	1	**iO 373 – HB2 71 B 6 B12B**	3	21	24	23	26	186
12	192	72,54	5310	1,15							
13	180	67,8	5420	1,25							
15	155	58,6	5640	1,45							
18	132	49,79	5850	1,7							
13	181	106,38	5380	1,25	**iO 373 – HB2 71 A 4 B12B**	3	20	22	22	24	186
14	167	97,81	5520	1,35							
17	143	83,69	5740	1,55							
19	124	72,54	5910	1,8							
21	116	67,8	5980	1,95							
24	100	58,6	5920	2,2							
28	85	49,79	5700	2,6							
31	76	44,46	5540	3							
37	65	37,97	5320	3,5							
39	61	35,57	5230	3,7							
47	51	29,96	5000	4,4							
49	49	28,83	4940	4,6							

(1) Finite transmission ratio *i*

P_1 = 0,37 kW

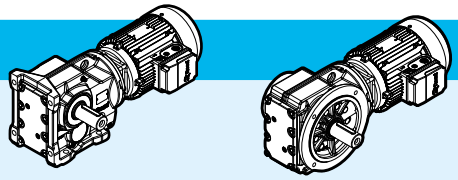

n_2 min^{-1}	M_2 N m	i	F_{r2} N	fs			kg foot HB	kg foot HBZ	kg flange HB	kg flange HBZ	p.
4,7	750	197,37	28900	4	**iO 873 – HB2 80 A 6 B25C**	3	103	107	108	112	201
5,3	662	174,19	28900	4,5							
6,0	585	154,02	19500	3	**iO 773 – HB2 80 A 6 B20C**	3	56	60	64	68	198
6,9	514	135,28	19700	3,4							
7,2	488	128,52	19700	3,6							
8,2	431	113,56	19800	4,1							
7,3	485	192,18	19700	3,3	**iO 773 – HB2 71 B 4 B20B**	3	55	58	63	65	198
7,8	453	179,37	19800	3,5							
9,1	389	154,02	19900	4,5							
7,5	469	123,54	12600	1,95	**iO 673 – HB2 80 A 6 B16C**	3	38	42	43	47	195
8,6	410	108,03	12800	2,3							
9,1	390	102,62	12900	2,4							
10	342	90,04	13000	2,7							
9,7	365	144,79 (1)	12900	2,5	**iO 673 – HB2 71 B 4 B16B**	3	36	39	42	44	195
11	312	123,54	13000	2,9							
13	273	108,03	13000	3,3							
16	227	90,04	13000	4							
18	193	76,37	13000	4,7							
7,5	471	123,85	8570	1,4	**iO 573 – HB2 80 A 6 B16C**	3	33	37	40	44	192
8,6	411	108,29	8840	1,65							
9,0	391	102,88 (1)	8930	1,7							
10	343	90,26 (1)	9130	1,95							
12	291	76,56 (1)	9320	2,3							
13	263	69,12	9430	2,6							
9,6	366	145,14 (1)	9040	1,85	**iO 573 – HB2 71 B 4 B16B**	3	32	35	39	41	192
11	313	123,85	9250	2,1							
13	273	108,29	9390	2,5							
14	260	102,88 (1)	9440	2,6							
16	228	90,26 (1)	9550	2,9							
18	193	76,56 (1)	9660	3,5							
20	174	69,12	9720	3,8							
8,9	397	104,37	6000	1,15	**iO 473 – HB2 80 A 6 B16C**	3	26	30	29	33	189
10	345	90,86	6630	1,3							
11	323	85,12 (1)	6860	1,4							
12	286	75,2 (1)	7200	1,55							
11	333	131,87 (1)	6780	1,35	**iO 473 – HB2 71 B 4 B16B**	3	25	28	27	30	189
12	307	121,48 (1)	7030	1,45							
13	263	104,37	7380	1,7							
15	229	90,86	7610	1,95							
16	215	85,12 (1)	7700	2,1							
19	190	75,2 (1)	7840	2,4							
20	176	69,84	7900	2,6							
22	160	63,3 (1)	7970	2,8							

(1) Finite transmission ratio *i*

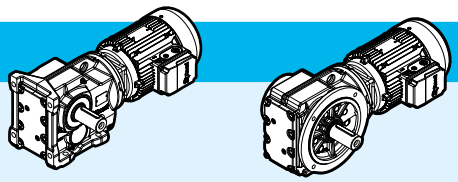

P_1 = 0,37 kW

n_2 min^{-1}	M_2 N m	i	F_{r2} N	fs			kg foot HB	kg foot HBZ	kg flange HB	kg flange HBZ	p.
14	247	97,81	3550	0,9	**iO 373 – HB2 71 B 4 B12B**	3	21	23	23	25	186
17	211	83,69	5130	1,05							
19	183	72,54	5380	1,2							
21	171	67,8	5490	1,3							
24	148	58,6	5480	1,5							
28	126	49,79	5320	1,8							
31	112	44,46	5200	2							
37	96	37,97	5030	2,3							
39	90	35,57	4960	2,5							
47	76	29,96	4770	3							
49	73	28,83	4720	3,1							
56	63	24,99	4560	3,6							
60	59	23,36	4480	3,7							
69	51	20,19	4320	4							
82	43	17,15	4130	4,6							

P_1 = 0,55 kW

4,7	1127	197,37	28700	2,7	**iO 873 – HB2 80 B 6 B25C**	3	104	108	109	113	201
5,3	994	174,19	28800	3							
5,6	938	164,34 (1)	28800	3,2							
6,2	841	147,32 (1)	28900	3,6							
6,0	879	154,02	18900	2	**iO 773 – HB2 80 B 6 B20C**	3	58	62	65	69	198
6,8	772	135,28	19200	2,3							
7,2	734	128,52	19300	2,4							
8,1	648	113,56	19500	2,7							
9,1	576	154,02	19600	3	**iO 773 – HB2 80 A 4 B20C**	3	56	60	63	67	198
10	506	135,28	19700	3,5							
11	480	128,52	19700	3,6							
12	425	113,56	19800	4,1							
14	363	97,05	19900	4,8							
7,4	705	123,54	11500	1,3	**iO 673 – HB2 80 B 6 B16C**	3	39	43	45	49	195
8,5	617	108,03	12000	1,5							
9,0	586	102,62	12100	1,6							
10	514	90,04	12500	1,8							
12	436	76,37	12800	2,1							
11	462	123,54	12600	2	**iO 673 – HB2 80 A 4 B16C**	3	37	41	43	47	195
13	404	108,03	12800	2,3							
16	337	90,04	13000	2,7							
18	286	76,37	13000	3,2							

(1) Finite transmission ratio *i*

P_1 = 0,55 kW

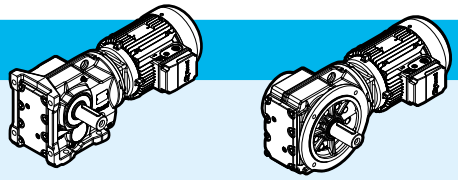

n_2 min^{-1}	M_2 N m	i	F_{r2} N	fs			kg foot HB	kg foot HBZ	kg flange HB	kg flange HBZ	p.
8,5	618	108,29	7720	1,1	**iO 573 – HB2 80 B 6 B16C**	3	35	39	42	45	192
8,9	587	102,88 (1)	7960	1,15							
10	515	90,26 (1)	8460	1,3							
12	437	76,56 (1)	8810	1,55							
13	395	69,12	8980	1,7							
15	347	60,81 (1)	9170	1,95							
16	328	57,42 (1)	9240	2							
11	463	123,85	8640	1,45	**iO 573 – HB2 80 A 4 B16C**	3	33	37	40	43	192
13	405	108,29	8900	1,65							
14	385	102,88 (1)	8980	1,75							
16	337	90,26 (1)	9170	2							
18	286	76,56 (1)	9360	2,3							
20	258	69,12	9460	2,6							
23	227	60,81 (1)	9560	2,9							
24	215	57,42 (1)	9600	3,1							
13	390	104,37	6170	1,15	**iO 473 – HB2 80 A 4 B16C**	3	26	30	28	32	189
15	340	90,86	6750	1,3							
17	318	85,12 (1)	6950	1,4							
19	281	75,2 (1)	7270	1,6							
20	261	69,84	7420	1,7							
22	237	63,3 (1)	7580	1,9							
25	212	56,83	7730	2,1							
29	183	48,95 (1)	7880	2,5							
31	172	46,03 (1)	7930	2,6							
24	219	58,6	4830	1	**iO 373 – HB2 80 A 4 B12C**	3	22	26	24	28	186
28	186	49,79	4760	1,2							
32	166	44,46	4700	1,35							
37	142	37,97	4600	1,6							
40	133	35,57	4560	1,7							
47	112	29,96	4420	2							
49	108	28,83	4390	2,1							
56	93	24,99	4270	2,4							
60	87	23,36	4210	2,5							
70	75	20,19	4080	2,7							
82	64	17,15	3930	3,1							
92	57	15,31	3830	3,4							
107	49	13,08	3680	3,8							
116	45	12,14	3610	4							
134	39	10,49	3470	4,6							

(1) Finite transmission ratio *i*

P_1 = 0,75 kW

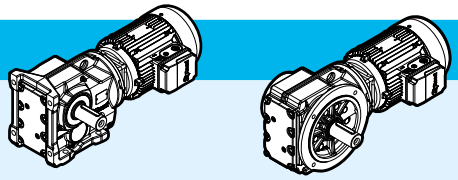

n_2 min^{-1}	M_2 N m	i	F_{r2} N	fs			kg foot HB	kg foot HBZ	kg flange HB	kg flange HBZ	p.
5,3	1342	174,19	28600	2,2	**iO 873 – HB3 90 S 6 B25D**	3	110	114	115	119	201
5,7	1266	164,34 (1)	28700	2,4							
6,3	1135	147,32 (1)	28700	2,6							
7,3	977	126,91 (1)	28800	3,1							
7,1	1003	197,37	28800	3	**iO 873 – HB3 80 B 4 B25C**	3	107	111	112	116	201
8,1	885	174,19	28800	3,4							
8,6	835	164,34 (1)	28900	3,6							
9,6	748	147,32 (1)	28900	4							
6,9	1042	135,28	18300	1,7	**iO 773 – HB3 90 S 6 B20D**	3	64	68	71	75	198
7,2	990	128,52	18400	1,75							
8,2	875	113,56	18800	2							
9,6	747	97,05	19200	2,3							
10	685	88,97	19300	2,6							
9,2	782	154,02	19100	2,2	**iO 773 – HB3 80 B 4 B20C**	3	60	64	68	72	198
10	687	135,28	19300	2,5							
11	653	128,52	19400	2,7							
12	577	113,56	19600	3							
15	493	97,05	19700	3,5							
11	628	123,54	11800	1,45	**iO 673 – HB3 80 B 4 B16C**	3	42	46	47	51	195
13	549	108,03	12200	1,65							
16	457	90,04	12600	2							
18	388	76,37	12900	2,3							
20	350	68,95	13000	2,6							
23	308	60,66	13000	2,9							
25	291	57,28	13000	3,1							
11	629	123,85	7500	1,05	**iO 573 – HB3 80 B 4 B16C**	3	37	41	44	48	192
13	550	108,29	8120	1,2							
14	523	102,88 (1)	8330	1,3							
16	459	90,26 (1)	8660	1,45							
18	389	76,56 (1)	8960	1,7							
20	351	69,12	9120	1,9							
23	309	60,81 (1)	9280	2,2							
25	292	57,42 (1)	9340	2,3							
29	248	48,89	9490	2,7							
32	226	44,43	9560	3							
19	382	75,2 (1)	6270	1,2	**iO 473 – HB3 80 B 4 B16C**	3	30	34	33	37	189
20	355	69,84	6590	1,25							
22	322	63,3 (1)	6920	1,4							
25	289	56,83	7210	1,55							
29	249	48,95 (1)	7500	1,8							
31	234	46,03 (1)	7600	1,9							
36	201	39,61	7790	2,2							
40	180	35,39	7690	2,5							
45	159	31,3	7480	2,8							

(1) Finite transmission ratio *i*

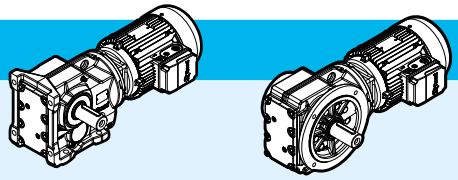

P_1 = 0,75 kW

n_2 min^{-1}	M_2 N m	i	F_{r2} N	fs			kg foot HB	kg foot HBZ	kg flange HB	kg flange HBZ	p.
32	226	44,46	4170	1	**iO 373 – HB3 80 B 4 B12C**	3	26	30	28	32	186
37	193	37,97	4140	1,15							
40	181	35,57	4130	1,25							
47	152	29,96	4060	1,45							
49	146	28,83	4040	1,55							
56	127	24,99	3970	1,75							
60	119	23,36	3930	1,85							
70	103	20,19	3840	2							
82	87	17,15	3720	2,3							
92	78	15,31	3640	2,5							
108	66	13,08	3520	2,8							
116	62	12,14	3460	2,9							
134	53	10,49	3340	3,4							
158	45	8,91	3210	4							
177	40	7,96	3120	4,3							

P_1 = 1,1 kW

5,3	1989	176,05 (1)	40000	2,4	**iO 973 – HB3 90 L 6 B30D**	3	174	180	190	197	204
6,1	1731	153,21 (1)	40000	2,8							
6,6	1585	140,28	40000	3,1							
7,5	1400	123,93 (1)	40000	3,5							
8,1	1302	176,05 (1)	40000	3,7	**iO 973 – HB3 90 S 4 B30D**	3	173	177	189	193	204
9,3	1133	153,21 (1)	40000	4,3							
10	1038	140,28	40000	4,7							
6,3	1664	147,32 (1)	28400	1,8	**iO 873 – HB3 90 L 6 B25D**	3	114	120	119	126	201
7,3	1434	126,91 (1)	28500	2,1							
8,2	1289	174,19	28600	2,3	**iO 873 – HB3 90 S 4 B25D**	3	113	117	118	122	201
8,6	1216	164,34 (1)	28700	2,5							
9,6	1090	147,32 (1)	28800	2,8							
11	939	126,91 (1)	28800	3,2							
12	857	115,82	28900	3,5							
8,2	1283	113,56	17200	1,35	**iO 773 – HB3 90 L 6 B20D**	3	68	74	75	82	198
9,6	1096	97,05	18000	1,6							
10	1001	135,28	18400	1,75	**iO 773 – HB3 90 S 4 B20D**	3	67	71	74	78	198
11	951	128,52	18600	1,85							
13	840	113,56	18900	2,1							
15	718	97,05	19300	2,4							
16	658	88,97	19400	2,7							
18	578	78,07	19600	3							
19	547	73,99	19600	3,2							

(1) Finite transmission ratio *i*

P_1 = 1,1 kW

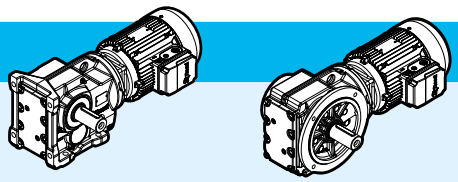

n_2 min^{-1}	M_2 N m	i	F_{r2} N	fs			kg foot HB	kg foot HBZ	kg flange HB	kg flange HBZ	p.
13	799	108,03	10700	1,15	**iO 673 – HB3 90 S 4 B16D**	3	48	52	54	58	195
14	759	102,62	11000	1,2							
16	666	90,04	11600	1,35							
19	565	76,37	12200	1,6							
21	510	68,95	12400	1,75							
23	449	60,66	12700	2							
25	424	57,28	12800	2,1							
29	361	48,77	13000	2,5							
32	328	44,32	13000	2,7							
37	284	38,39	13000	3,1							
16	668	90,26 (1)	6280	1	**iO 573 – HB3 90 S 4 B16D**	3	44	48	51	55	192
19	566	76,56 (1)	8010	1,2							
21	511	69,12	8420	1,3							
23	450	60,81 (1)	8710	1,5							
25	425	57,42 (1)	8820	1,6							
29	362	48,89	9080	1,85							
32	329	44,43	9210	2							
37	285	38,49	9370	2,4							
40	264	35,7	9440	2,5							
47	224	30,28	9570	3							
52	202	27,34	9430	3,3							
59	178	24,05	9130	3,8							
63	168	22,71	9000	4							
73	143	19,34	8640	4,5							
81	130	17,57	8420	4,7							
93	113	15,22	8100	5,3							
107	98	13,25	7790	5,9							
119	88	11,92	7490	5,2							
126	83	11,26	7370	5,5							
148	71	9,59	7040	6,3							
163	64	8,71	6850	6,7							
188	56	7,55	6570	7,2							
216	49	6,57	6310	7,8							
25	420	56,83	5430	1,05	**iO 473 – HB3 90 S 4 B16D**	3	37	41	39	43	189
29	362	48,95 (1)	6520	1,25							
31	341	46,03 (1)	6750	1,3							
36	293	39,61	7160	1,55							
40	262	35,39	7050	1,7							
45	232	31,3	6920	1,95							
48	217	29,32	6840	2,1							
55	192	25,91	6690	2,3							
59	178	24,06	6060	2,5							
65	161	21,81	6460	2,8							
73	145	19,58	6310	3,1							

(1) Finite transmission ratio *i*

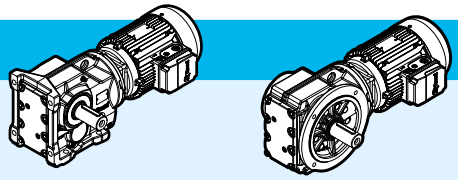

P_1 = 1,1 kW

n_2 min^{-1}	M_2 N m	i	F_{r2} N	fs			kg foot HB	kg foot HBZ	kg flange HB	kg flange HBZ	p.
47	222	29,96	3430	1	**iO 373 – HB3 90 S 4 B12D**	3	32	36	34	38	186
57	185	24,99	3440	1,2							
61	173	23,36	3430	1,25							
70	149	20,19	3410	1,4							
83	127	17,15	3360	1,6							
93	113	15,31	3310	1,7							
109	97	13,08	3240	1,9							
117	90	12,14	3200	2							
135	78	10,49	3120	2,3							
159	66	8,91	3020	2,7							
178	59	7,96	2950	3							
209	50	6,8	2850	3,4							
223	47	6,37	2800	3,4							
265	40	5,36	2690	3,8							

P_1 = 1,5 kW

5,4	2655	176,05 (1)	40000	1,85	**iO 973 – HB3 100 LA 6 B30E**	3	180	186	197	203	204
6,2	2310	153,21 (1)	40000	2,1							
6,8	2115	140,28	40000	2,3							
7,7	1869	123,93 (1)	40000	2,6							
8,1	1764	176,05 (1)	40000	2,8	**iO 973 – HB3 90 L 4 B30D**	3	173	179	190	196	204
9,3	1535	153,21 (1)	40000	3,2							
10	1405	140,28	40000	3,5							
12	1241	123,93 (1)	40000	3,9							
6,4	2222	147,32 (1)	27900	1,35	**iO 873 – HB3 100 LA 6 B25E**	3	123	129	129	135	201
7,5	1914	126,91 (1)	28200	1,55							
8,2	1746	115,82	28300	1,7							
9,2	1549	102,71 (1)	28400	1,95							
8,2	1745	174,19	28300	1,7	**iO 873 – HB3 90 L 4 B25D**	3	113	119	119	125	201
8,7	1646	164,34 (1)	28400	1,8							
9,7	1476	147,32 (1)	28500	2							
11	1271	126,91 (1)	28600	2,4							
12	1160	115,82	28700	2,6							
14	1029	102,71 (1)	28800	2,9							
17	865	86,34	28900	3,5							
8,4	1712	113,56	14300	1	**iO 773 – HB3 100 LA 6 B20E**	3	77	83	85	91	198
9,8	1463	97,05	16100	1,2							
11	1342	88,97	16800	1,3							
12	1177	78,07	17600	1,5							

(1) Finite transmission ratio *i*

P_1 = 1,5 kW

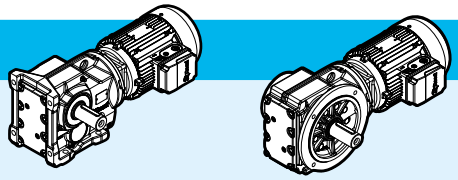

n_2 min^{-1}	M_2 N m	i	F_{r2} N	fs			kg foot HB	kg foot HBZ	kg flange HB	kg flange HBZ	p.
11	1355	135,28	16800	1,3	**iO 773 – HB3 90 L 4 B20D**	3	67	73	75	81	198
11	1287	128,52	17100	1,35							
13	1138	113,56	17800	1,55							
15	972	97,05	18500	1,8							
16	891	88,97	18800	1,95							
18	782	78,07	19100	2,2							
19	741	73,99	19200	2,4							
22	649	64,75	19400	2,7							
25	584	58,34	19600	3							
28	513	51,18	19700	3,4							
32	452	45,16	19800	3,9							
36	401	40,04	19900	4,4							
16	902	90,04	9710	1	**iO 673 – HB3 90 L 4 B16D**	3	49	55	54	60	195
19	765	76,37	10900	1,2							
21	691	68,95	11400	1,3							
24	608	60,66	11900	1,45							
25	574	57,28	12100	1,55							
29	489	48,77	12500	1,8							
32	444	44,32	12700	2							
37	385	38,39	12900	2,3							
40	357	35,62	13000	2,5							
47	303	30,22	13000	2,9							
52	273	27,28	13000	3,2							
60	240	24	13000	3,6							
24	609	60,81 (1)	7660	1,1	**iO 573 – HB3 90 L 4 B16D**	3	44	50	51	57	192
25	575	57,42 (1)	7930	1,15							
29	490	48,89	8520	1,35							
32	445	44,43	8720	1,5							
37	386	38,49	8980	1,75							
40	358	35,7	9090	1,85							
47	303	30,28	9130	2,2							
52	274	27,34	8950	2,4							
59	241	24,05	8710	2,8							
63	228	22,71	8600	2,9							
74	194	19,34	8300	3,4							

(1) Finite transmission ratio *i*

P_1 = 1,5 kW

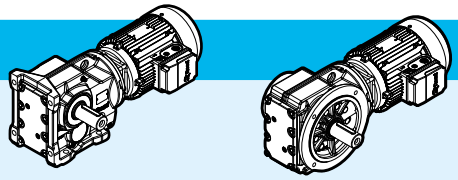

n_2 min^{-1}	M_2 N m	i	F_{r2} N	fs			kg foot HB	kg foot HBZ	kg flange HB	kg flange HBZ	p.
36	397	39,61	6080	1,15	**iO 473 – HB3 90 L 4 B16D**	3	37	43	40	46	189
40	355	35,39	6340	1,25							
46	314	31,3	6290	1,45							
49	294	29,32	6250	1,55							
55	260	25,91	6160	1,75							
59	241	24,06	6090	1,85							
66	218	21,81	6020	2,1							
73	196	19,58	5920	2,3							
85	169	16,86	5760	2,5							
90	159	15,86	5690	2,7							
105	137	13,65	5520	2,9							
117	122	12,19	5390	3,2							
122	118	11,77	5300	2,4							
61	234	23,36	2880	0,95	**iO 373 – HB3 90 L 4 B12D**	3	33	39	35	41	186
71	202	20,19	2920	1							
83	172	17,15	2950	1,15							
93	153	15,31	2940	1,25							
109	131	13,08	2920	1,4							
118	122	12,14	2910	1,5							
136	105	10,49	2870	1,7							
160	89	8,91	2810	2							
180	80	7,96	2760	2,2							
210	68	6,8	2680	2,5							
225	64	6,37	2650	2,5							
267	54	5,36	2560	2,8							

P_1 = 2,2 kW

6,3	3353	153,21 (1)	40000	1,45	**iO 973 – HB3 112 M 6 B30F**	3	188	197	205	214	204
6,8	3070	140,28	40000	1,6							
7,7	2712	123,93 (1)	40000	1,8							
9,1	2301	105,13	40000	2,1							
8,2	2569	176,05 (1)	40000	1,9	**iO 973 – HB3 100 LA 4 B30E**	3	180	186	197	203	204
9,4	2235	153,21 (1)	40000	2,2							
10	2047	140,28	40000	2,4							
12	1808	123,93 (1)	40000	2,7							
14	1534	105,13	40000	3,2							
15	1412	96,8	40000	3,4							
9,8	2150	147,32 (1)	27900	1,4	**iO 873 – HB3 100 LA 4 B25E**	3	123	129	129	135	201
11	1852	126,91 (1)	28200	1,6							
12	1690	115,82	28300	1,8							
14	1499	102,71 (1)	28500	2							
17	1260	86,34	28600	2,4							
18	1158	79,34	28700	2,6							
20	1028	70,46	28800	2,9							
23	919	63 (1)	28800	3,3							

(1) Finite transmission ratio *i*

P_1 = 2,2 kW

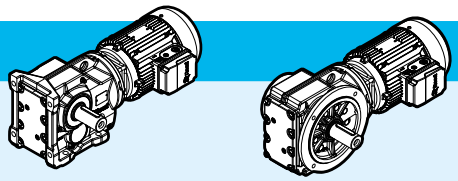

n_2 min^{-1}	M_2 N m	i	F_{r2} N	fs			kg foot HB	kg foot HBZ	kg flange HB	kg flange HBZ	p.
13	1657	113,56	14700	1,05	**iO 773 – HB3 100 LA 4 B20E**	3	77	83	85	91	198
15	1416	97,05	16300	1,25							
16	1298	88,97	17000	1,35							
18	1139	78,07	17800	1,55							
19	1080	73,99	18000	1,6							
22	945	64,75	18500	1,85							
25	851	58,34	18800	2,1							
28	747	51,18	19200	2,3							
32	659	45,16	19400	2,7							
36	584	40,04	19500	3							
41	513	35,2	19700	3,4							
47	451	30,89	19800	3,9							
49	427	29,27	19800	4,1							
56	374	25,62	19900	4,7							
24	885	60,66	9750	1	**iO 673 – HB3 100 LA 4 B16E**	3	58	64	64	70	195
25	836	57,28	10200	1,05							
30	712	48,77	11200	1,25							
32	647	44,32	11600	1,35							
38	560	38,39	12100	1,55							
40	520	35,62	12300	1,7							
48	441	30,22	12700	2							
53	398	27,28	12800	2,2							
60	350	24	13000	2,5							
64	331	22,66	13000	2,6							
75	281	19,3	13000	3							
82	256	17,54	13000	3,2							
95	222	15,19	13000	3,5							
109	193	13,22	13000	3,5							
115	182	12,48	13000	2,9							
135	155	10,63	13000	3,2							
149	141	9,66	13000	3,4							
172	122	8,37	13000	3,6							
198	106	7,28	12700	4							
32	648	44,43	7040	1,05	**iO 573 – HB3 100 LA 4 B16E**	3	54	60	61	67	192
37	562	38,49	7970	1,2							
40	521	35,7	8290	1,3							
48	442	30,28	8230	1,5							
53	399	27,34	8140	1,7							
60	351	24,05	8000	1,9							
63	331	22,71	7930	2							
74	282	19,34	7730	2,3							
82	256	17,57	7590	2,4							
95	222	15,22	7380	2,7							
109	193	13,25	7170	3							
121	174	11,92	6850	2,7							
128	164	11,26	6770	2,8							

P_1 = 2,2 kW

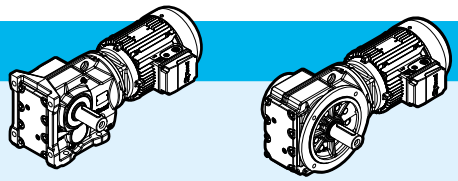

n_2 min^{-1}	M_2 N m	i	F_{r2} N	fs			kg foot HB	kg foot HBZ	kg flange HB	kg flange HBZ	p.
56	378	25,91	5260	1,2	**iO 473 – HB3 100 LA 4 B16E**	3	47	53	49	55	189
66	318	21,81	5260	1,4							
74	286	19,58	5240	1,6							
85	246	16,86	5180	1,75							
91	231	15,86	5140	1,85							
106	199	13,65	5050	2							
118	178	12,19	4970	2,2							
122	172	11,77	4870	1,65							
136	154	10,56	4790	1,85							
158	133	9,1	4660	2,1							
110	191	13,08	2380	0,95	**iO 373 – HB3 100 LA 4 B12E**	3	42	48	44	50	186
137	153	10,49	2430	1,2							
162	130	8,91	2440	1,4							
181	116	7,96	2430	1,5							
212	99	6,8	2400	1,7							
226	93	6,37	2390	1,7							
269	78	5,36	2340	1,95							

P_1 = 3 kW

7,8	3660	123,93 (1)	40000	1,35	**iO 973 – HB3 132 S 6 B30G**	3	210	221	226	237	204
9,2	3105	105,13	40000	1,55							
10	2859	96,8	40000	1,7							
11	2556	86,52	40000	1,9							
8,2	3479	176,05 (1)	40000	1,4	**iO 973 – HB3 112 MA 4 B30E**	3	188	194	205	211	204
9,5	3027	153,21 (1)	40000	1,6							
10	2772	140,28	40000	1,75							
12	2449	123,93 (1)	40000	2							
14	2077	105,13	40000	2,3							
15	1913	96,8	40000	2,5							
17	1710	86,52	40000	2,8							
19	1539	77,89 (1)	40000	3,2							
21	1394	70,54	40000	3,5							
23	1236	62,55	40000	3,9							
26	1117	56,55	40000	4,4							
9,8	2911	147,32 (1)	27000	1,05	**iO 873 – HB3 112 MA 4 B25E**	3	131	137	136	142	201
11	2508	126,91 (1)	27500	1,2							
13	2288	115,82	27800	1,3							
14	2029	102,71 (1)	28000	1,5							
17	1706	86,34	28300	1,75							
18	1568	79,34	28400	1,9							
21	1392	70,46	28600	2,2							
23	1245	63 (1)	28600	2,4							
26	1119	56,64	28700	2,7							
29	971	49,16	28800	3,1							
33	870	44,02	28800	3,3							
40	722	36,52 (1)	28200	3,9							

(1) Finite transmission ratio *i*

P_1 = 3 kW

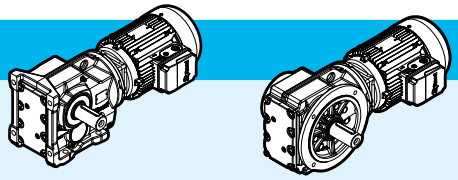

n_2 min^{-1}	M_2 N m	i	F_{r2} N	fs			kg foot HB	kg foot HBZ	kg flange HB	kg flange HBZ	p.
16	1758	88,97	13800	1	**iO 773 – HB3 112 MA 4 B20E**	3	86	92	94	100	198
19	1543	78,07	15500	1,15							
20	1462	73,99	16000	1,2							
22	1279	64,75	17100	1,35							
25	1153	58,34	17700	1,5							
28	1011	51,18	18300	1,75							
32	892	45,16	18700	1,95							
36	791	40,04	19000	2,2							
41	695	35,2	19300	2,5							
47	610	30,89	19500	2,9							
33	876	44,32	9820	1	**iO 673 – HB3 112 MA 4 B16E**	3	66	72	71	77	195
38	759	38,39	10900	1,15							
41	704	35,62	11300	1,25							
48	597	30,22	11900	1,45							
53	539	27,28	12200	1,6							
60	474	24	12500	1,85							
64	448	22,66	12600	1,95							
75	381	19,3	12900	2,2							
83	346	17,54	13000	2,4							
95	300	15,19	13000	2,6							
110	261	13,22	13000	2,6							
116	247	12,48	13000	2,2							
136	210	10,63	13000	2,4							
150	191	9,66	13000	2,5							
48	598	30,28	7190	1,1	**iO 573 – HB3 112 MA 4 B16E**	3	61	67	68	74	192
53	540	27,34	7190	1,25							
60	475	24,05	7170	1,4							
64	449	22,71	7150	1,5							
75	382	19,34	7060	1,7							
83	347	17,57	6980	1,75							
95	301	15,22	6860	2							
109	262	13,25	6710	2,2							
122	236	11,92	6380	1,95							
129	222	11,26	6330	2,1							
151	189	9,59	6160	2,4							
166	172	8,71	6040	2,5							
192	149	7,55	5870	2,7							
221	130	6,57	5700	2,9							

P_1 = 3 kW

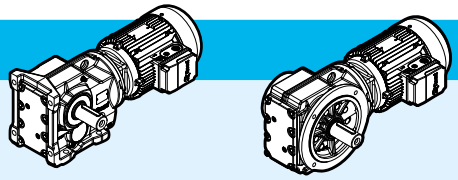

n_2 min^{-1}	M_2 N m	i	F_{r2} N	fs			kg foot HB	kg foot HBZ	kg flange HB	kg flange HBZ	p.
74	387	19,58	4450	1,15	**iO 473 – HB3 112 MA 4 B16E**	3	54	60	57	63	189
86	333	16,86	4500	1,3							
91	313	15,86	4510	1,35							
106	270	13,65	4500	1,5							
119	241	12,19	4480	1,6							
123	232	11,77	4360	1,2							
137	209	10,56	4340	1,35							
159	180	9,1	4280	1,55							
169	169	8,56	4250	1,6							
197	145	7,36	4160	1,75							
220	130	6,58	4090	1,85							
249	115	5,81	4000	2							
163	176	8,91	2020	1	**iO 373 – HB3 112 MA 4 B12E**	3	50	56	52	58	186
182	157	7,96	2050	1,1							
213	134	6,8	2080	1,25							
228	126	6,37	2090	1,25							
270	106	5,36	2090	1,45							

P_1 = 4 kW

9,5	4036	153,21 (1)	40000	1,2	**iO 973 – HB3 112 M 4 B30F**	3	190	199	207	216	204
10	3696	140,28	40000	1,3							
12	3265	123,93 (1)	40000	1,5							
14	2770	105,13	40000	1,75							
15	2550	96,8	40000	1,9							
17	2279	86,52	40000	2,1							
19	2052	77,89 (1)	40000	2,4							
21	1858	70,54	40000	2,6							
13	3051	115,82	26900	1	**iO 873 – HB3 112 M 4 B25F**	3	133	142	138	147	201
14	2706	102,71 (1)	27300	1,1							
17	2275	86,34	27800	1,3							
18	2090	79,34	28000	1,45							
21	1856	70,46	28200	1,6							
23	1660	63 (1)	28400	1,8							
26	1492	56,64	28500	2							
29	1295	49,16	28600	2,3							
33	1160	44,02	28200	2,5							
40	962	36,52 (1)	27200	2,9							

(1) Finite transmission ratio *i*

P_1 = 4 kW

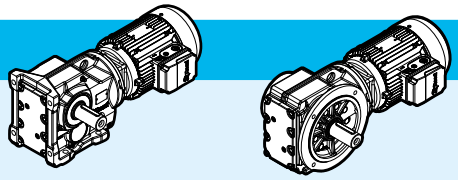

n_2 min^{-1}	M_2 N m	i	F_{r2} N	fs			kg foot HB	kg foot HBZ	kg flange HB	kg flange HBZ	p.
22	1706	64,75	14300	1,05	**iO 773 – HB3 112 M 4 B20F**	3	88	97	96	105	198
25	1537	58,34	15600	1,15							
28	1348	51,18	16700	1,3							
32	1190	45,16	17500	1,45							
36	1055	40,04	18100	1,65							
38	1011	38,39	18300	1,7							
41	927	35,2	18600	1,9							
47	814	30,89	19000	2,2							
50	771	29,27	19100	2,3							
57	675	25,62	19300	2,6							
63	608	23,08	19500	2,9							
72	533	20,25	19600	3,2							
48	796	30,22	10600	1,1	**iO 673 – HB3 112 M 4 B16F**	3	68	77	73	82	195
53	718	27,28	11200	1,2							
60	632	24	11700	1,35							
64	597	22,66	11900	1,45							
75	508	19,3	12400	1,65							
83	462	17,54	12600	1,8							
95	400	15,19	12800	1,9							
110	348	13,22	13000	1,95							
116	329	12,48	13000	1,65							
136	280	10,63	13000	1,8							
150	254	9,66	12800	1,9							
173	220	8,37	12400	2							
199	192	7,28	12000	2,2							
60	634	24,05	6140	1,05	**iO 573 – HB3 112 M 4 B16F**	3	63	72	70	79	192
64	598	22,71	6180	1,1							
75	509	19,34	6230	1,3							
83	463	17,57	6230	1,35							
95	401	15,22	6200	1,5							
109	349	13,25	6140	1,65							
122	314	11,92	5800	1,45							
129	297	11,26	5780	1,55							
151	253	9,59	5680	1,8							
166	230	8,71	5620	1,9							
192	199	7,55	5500	2							
221	173	6,57	5380	2,2							

P_1 = 5,5 kW

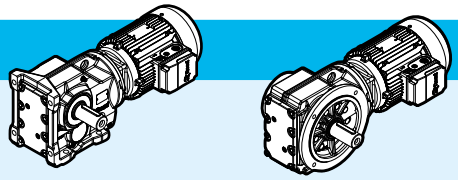

n_2 min^{-1}	M_2 N m	i	F_{r2} N	fs			kg foot HB	kg foot HBZ	kg flange HB	kg flange HBZ	p.
12	4428	123,93 (1)	40000	1,1	iO 973 – HB3 132 S 4 B30G	3	214	225	230	241	204
14	3756	105,13	40000	1,3							
15	3459	96,8	40000	1,4							
17	3092	86,52	40000	1,6							
19	2783	77,89 (1)	40000	1,75							
21	2520	70,54	40000	1,95							
24	2235	62,55	40000	2,2							
26	2021	56,55	39600	2,4							
31	1713	47,93 (1)	38400	2,8							
17	3085	86,34	26700	0,95	iO 873 – HB3 132 S 4 B25G	3	158	169	163	174	201
19	2835	79,34	27100	1,05							
21	2518	70,46	27500	1,2							
23	2251	63 (1)	27400	1,35							
26	2024	56,64	27200	1,5							
30	1757	49,16	26800	1,7							
33	1573	44,02	26400	1,85							
40	1305	36,52 (1)	25700	2,1							
47	1121	31,39	25100	2,7							
53	996	27,88	24600	2,9							
33	1614	45,16	14800	1,1	iO 773 – HB3 132 S 4 B20G	3	110	121	118	129	198
37	1431	40,04	16100	1,2							
48	1103	30,89	17900	1,6							
50	1046	29,27	18100	1,65							
57	915	25,62	18600	1,9							
64	825	23,08	18900	2,1							
73	723	20,25	19200	2,4							
82	638	17,87	19400	2,5							
93	566	15,84	19100	2,7							
109	483	13,52	18500	3,1							
119	441	12,36	17800	2,4							
136	387	10,84	17400	2,6							
61	857	24	9910	1	iO 673 – HB3 132 S 4 B16G	3	91	102	97	108	195
65	810	22,66	10400	1,05							
76	689	19,3	11300	1,25							
84	626	17,54	11700	1,3							
97	543	15,19	12200	1,4							
111	472	13,22	12500	1,4							
118	446	12,48	12600	1,2							
138	380	10,63	12400	1,3							
152	345	9,66	12200	1,4							
176	299	8,37	11900	1,45							
202	260	7,28	11600	1,6							

(1) Finite transmission ratio *i*

P_1 = 7,5 kW

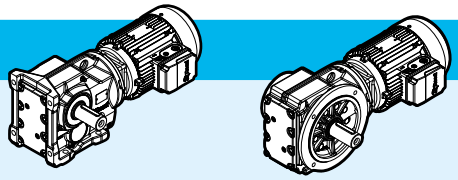

n_2 min^{-1}	M_2 N m	i	F_{r2} N	fs			kg foot HB	kg foot HBZ	kg flange HB	kg flange HBZ	p.
15	4749	96,8	38400	1,05	**iO 973 – HB3 132 M 4 B30G**	3	222	233	238	249	204
17	4245	86,52	38300	1,15							
19	3821	77,89 (1)	38100	1,25							
21	3460	70,54	37800	1,4							
23	3069	62,55	37400	1,6							
26	2774	56,55	37000	1,75							
30	2351	47,93 (1)	36200	2,1							
35	2054	41,87	35500	2,4							
38	1878	38,3	35000	2,6							
43	1679	34,23	34300	2,9							
23	3091	63 (1)	24100	0,95	**iO 873 – HB3 132 M 4 B25G**	3	166	177	171	182	201
26	2779	56,64	24200	1,1							
30	2412	49,16	24200	1,25							
33	2160	44,02	24100	1,35							
40	1792	36,52 (1)	23800	1,55							
47	1540	31,39	23400	1,95							
52	1367	27,88	23100	2,1							
59	1222	24,92	22700	2,3							
65	1099	22,41	22400	2,3							
75	954	19,45	21800	2,7							
84	854	17,42	21400	2,8							
91	785	16	20500	2,5							
101	709	14,45	20600	3,3							
47	1515	30,89	15700	1,15	**iO 773 – HB3 132 M 4 B20G**	3	118	129	126	137	198
50	1436	29,27	16200	1,2							
57	1257	25,62	17200	1,4							
63	1132	23,08	17800	1,55							
72	993	20,25	18400	1,7							
82	876	17,87	18500	1,85							
92	777	15,84	18200	2							
108	663	13,52	17700	2,3							
118	606	12,36	17000	1,7							
135	532	10,84	16600	1,85							
153	469	9,56	16200	2							
172	416	8,48	15800	2,1							
202	355	7,24	15300	2,3							

(1) Finite transmission ratio *i*

P_1 = 9,2 kW

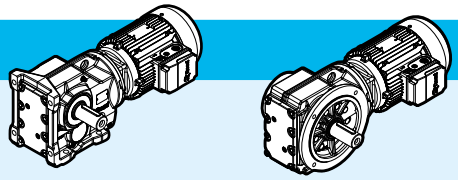

n_2 min^{-1}	M_2 N m	i	F_{r2} N	fs			kg foot HB	kg foot HBZ	kg flange HB	kg flange HBZ	p.
19	4687	77,89 (1)	35100	1,05	**iO 973 – HB3 132 MB 4 B30H**	3	224	236	241	253	204
21	4245	70,54	35100	1,15							
23	3764	62,55	35000	1,3							
26	3403	56,55	34800	1,45							
30	2884	47,93 (1)	34400	1,7							
35	2519	41,87	33900	1,95							
38	2304	38,3	33500	2,1							
43	2059	34,23	33000	2,4							
47	1854	30,82	32400	2,6							
52	1679	27,91	31900	2,9							
59	1489	24,75	31200	3,3							
30	2958	49,16	22000	1	**iO 873 – HB3 132 MB 4 B25H**	3	168	180	174	186	201
33	2649	44,02	22200	1,1							
40	2198	36,52 (1)	22200	1,25							
47	1889	31,39	22000	1,6							
52	1677	27,88	21900	1,75							
59	1499	24,92	21600	1,85							
65	1348	22,41	21400	1,9							
75	1170	19,45	21000	2,2							
84	1048	17,42	20600	2,3							
91	963	16	19700	2							
101	869	14,45	20000	2,7							
116	756	12,56	19500	3							
131	672	11,17	18500	2,5							
146	601	10	18200	2,8							
63	1389	23,08	16500	1,25	**iO 773 – HB3 132 MB 4 B20H**	3	121	133	129	141	198
72	1218	20,25	17400	1,4							
82	1075	17,87	17600	1,5							
92	953	15,84	17300	1,65							
108	814	13,52	17000	1,85							
118	743	12,36	16200	1,4							
135	652	10,84	15900	1,55							
153	575	9,56	15600	1,65							
172	510	8,48	15300	1,75							
202	436	7,24	14900	1,9							

(1) Finite transmission ratio *i*

P_1 = 11 kW

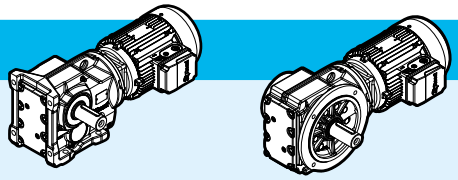

n_2 min^{-1}	M_2 N m	i	F_{r2} N	fs			kg foot HB	kg foot HBZ	kg flange HB	kg flange HBZ	p.
21	5041	70,54	32300	0,95	**iO 973 – HB3 160 M 4 B30H**	3	172	–	188	–	204
24	4470	62,55	32500	1,1							
26	4041	56,55	32500	1,2							
31	3425	47,93 (1)	32400	1,4							
35	2992	41,87	32200	1,65							
38	2736	38,3	31900	1,8							
43	2446	34,23	31600	2							
48	2202	30,82	31200	2,2							
53	1994	27,91	30700	2,4							
59	1768	24,75	30200	2,8							
66	1599	22,37	29700	3							
33	3146	44,02	20100	0,9	**iO 873 – HB3 160 M 4 B25H**	3	114	–	119	–	201
40	2610	36,52 (1)	20500	1,05							
47	2243	31,39	20600	1,35							
53	1992	27,88	20500	1,45							
59	1781	24,92	20400	1,55							
66	1601	22,41	20300	1,6							
76	1390	19,45	20000	1,85							
84	1244	17,42	19800	1,95							
92	1143	16	18800	1,7							
102	1032	14,45	19300	2,3							
117	898	12,56	18900	2,5							
132	798	11,17	17900	2,1							
147	714	10	17600	2,4							
177	593	8,29	17000	2,6							
204	515	7,21	16600	2,8							
64	1649	23,08	14700	1,05	**iO 773 – HB3 160 M 4 B20H**	3	65	–	73	–	198
73	1447	20,25	16100	1,2							
82	1277	17,87	16600	1,25							
93	1132	15,84	16500	1,35							
109	966	13,52	16200	1,55							
119	883	12,36	15500	1,2							
136	774	10,84	15300	1,3							
154	683	9,56	15000	1,4							
173	606	8,48	14800	1,45							
203	517	7,24	14400	1,6							

(1) Finite transmission ratio *i*

P_1 = 15 kW

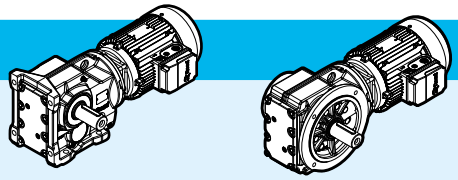

n_2 min^{-1}	M_2 N m	i	F_{r2} N	fs			kg foot HB	kg foot HBZ	kg flange HB	kg flange HBZ	p.
31	4671	47,93 (1)	28100	1,05	**iO 973 – HB3 160 L 4 B30H**	3	172	–	188	–	204
35	4080	41,87	28400	1,2							
38	3731	38,3	28500	1,3							
43	3335	34,23	28500	1,45							
48	3002	30,82	28400	1,6							
53	2719	27,91	28200	1,8							
59	2411	24,75	28000	2							
66	2180	22,37	27700	2,2							
78	1848	18,96	27100	2,6							
89	1614	16,56	26600	3							
47	3058	31,39	17300	1	**iO 873 – HB3 160 L 4 B25H**	3	114	–	119	–	201
53	2716	27,88	17600	1,05							
59	2428	24,92	17900	1,15							
66	2183	22,41	18000	1,2							
76	1895	19,45	18000	1,35							
84	1697	17,42	18000	1,45							
92	1559	16	16800	1,25							
102	1408	14,45	17800	1,7							
117	1224	12,56	17600	1,85							
132	1088	11,17	16600	1,55							
147	974	10	16400	1,75							
177	808	8,29	16000	1,9							
204	703	7,21	15700	2,1							

P_1 = 18,5 kW

35	5049	41,87	25100	0,95	**iO 973 – HB3 180 M 4 B30L**	3	172	–	188	–	204
48	3715	30,82	26000	1,3							
53	3365	27,91	26000	1,45							
59	2984	24,75	26000	1,65							
65	2698	22,37	25900	1,8							
77	2286	18,96	25600	2,1							
88	1997	16,56	25300	2,4							
106	1670	13,85	24700	2,7							
122	1446	11,99	24200	3							
59	3005	24,92	15600	0,95	**iO 873 – HB3 180 M 4 B25L**	3	114	–	119	–	201
65	2702	22,41	15900	0,95							
75	2345	19,45	16200	1,1							
84	2100	17,42	16400	1,15							
101	1742	14,45	16500	1,35							
117	1515	12,56	16400	1,5							
131	1346	11,17	15400	1,25							
147	1205	10	15300	1,4							
177	1000	8,29	15100	1,55							
203	870	7,21	14900	1,65							

(1) Finite transmission ratio *i*

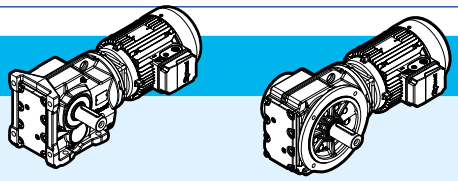

P_1 = 22 kW

n_2 min^{-1}	M_2 N m	i	F_{r2} N	fs			kg foot HB	kg foot HBZ	kg flange HB	kg flange HBZ	p.
48	4403	30,82	23500	1,1	**iO 973 – HB3 180 L 4 B30L**	3	172	–	188	–	204
53	3988	27,91	23800	1,2							
59	3536	24,75	24100	1,4							
66	3197	22,37	24200	1,5							
78	2710	18,96	24100	1,8							
89	2367	16,56	24000	2,1							
106	1979	13,85	23700	2,3							
123	1714	11,99	23300	2,5							
141	1488	10,41	21800	2,1							
169	1244	8,71	21300	2,3							
76	2779	19,45	14500	0,9	**iO 873 – HB3 180 L 4 B25L**	3	114	–	119	–	201
84	2489	17,42	14800	1							
102	2065	14,45	15200	1,15							
117	1795	12,56	15300	1,25							
132	1595	11,17	14200	1,05							
147	1429	10	14300	1,2							
177	1185	8,29	14300	1,3							
204	1031	7,21	14200	1,4							

P_1 = 30kW

59	4822	24,75	19600	1	**iO 973 – HB3 200 L 4 B30M**	3	178	–	194	–	204
66	4360	22,37	20200	1,1							
78	3695	18,96	20700	1,3							
89	3227	16,56	21000	1,5							
106	2699	13,85	21200	1,7							
123	2337	11,99	21100	1,85							
141	2029	10,41	19500	1,55							
169	1697	8,71	19400	1,7							

page intentionally left blank

12

Bevel helical
Dimensional drawings - iO

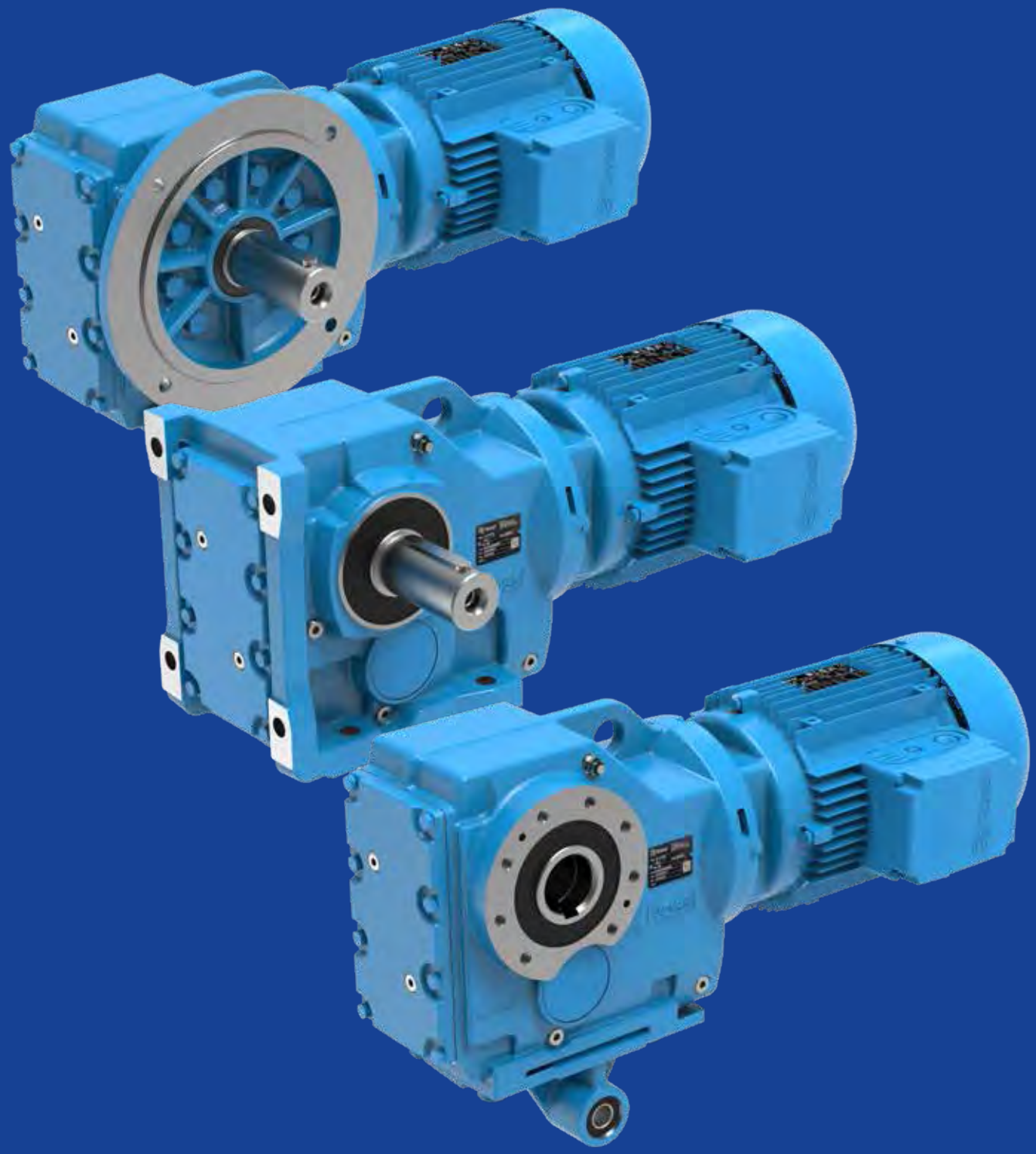

Section contents

12.1	iO 373	186
12.2	iO 473	189
12.3	iO 573	192
12.4	iO 673	195
12.5	iO 773	198
12.6	iO 873	201
12.7	iO 973	204

12.1

iO 373 PE

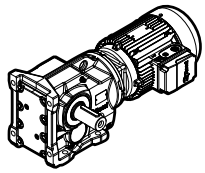

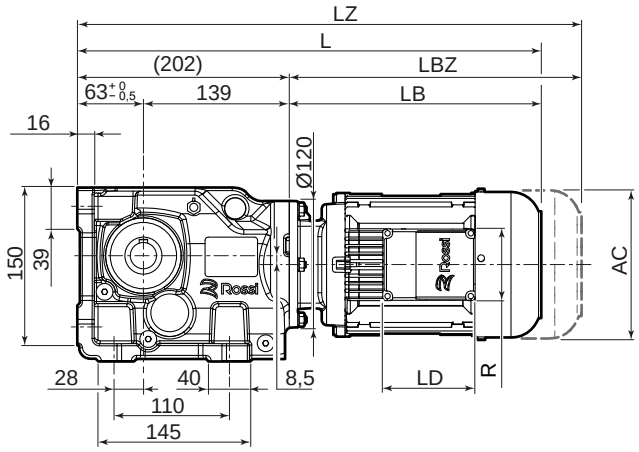

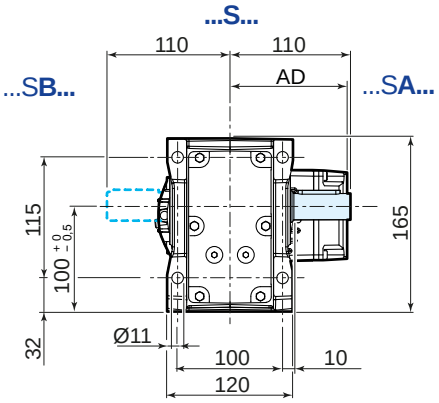

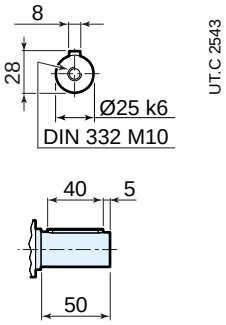

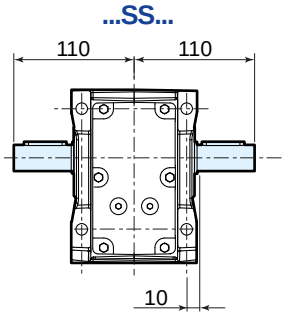

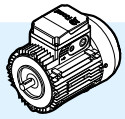

	63	71	80	90S [2]	90L	100	112
AC	123	138	156	176	176	194	218
AD	95	112	121	141	141	151	163
LB	211	237	266	290	320	351	389
LBZ	266	299	335	369	399	446	488
L [1]	413	439	468	492	522	553	591
LZ [1]	468	501	537	571	601	648	690
LD	103	103	103	136	136	136	136
R	86	86	86	106	106	106	106

153
74
208

[1] See also pages 80, 81.
[2] For motors HB3-HB3Z 90S 2, HB3-HB3Z 90S 4 dimensions as motor size 90L.

For details about drive end **A** and **B** see page 39.

iO 373 FE...F316

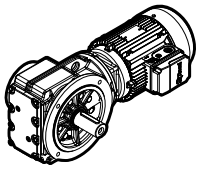

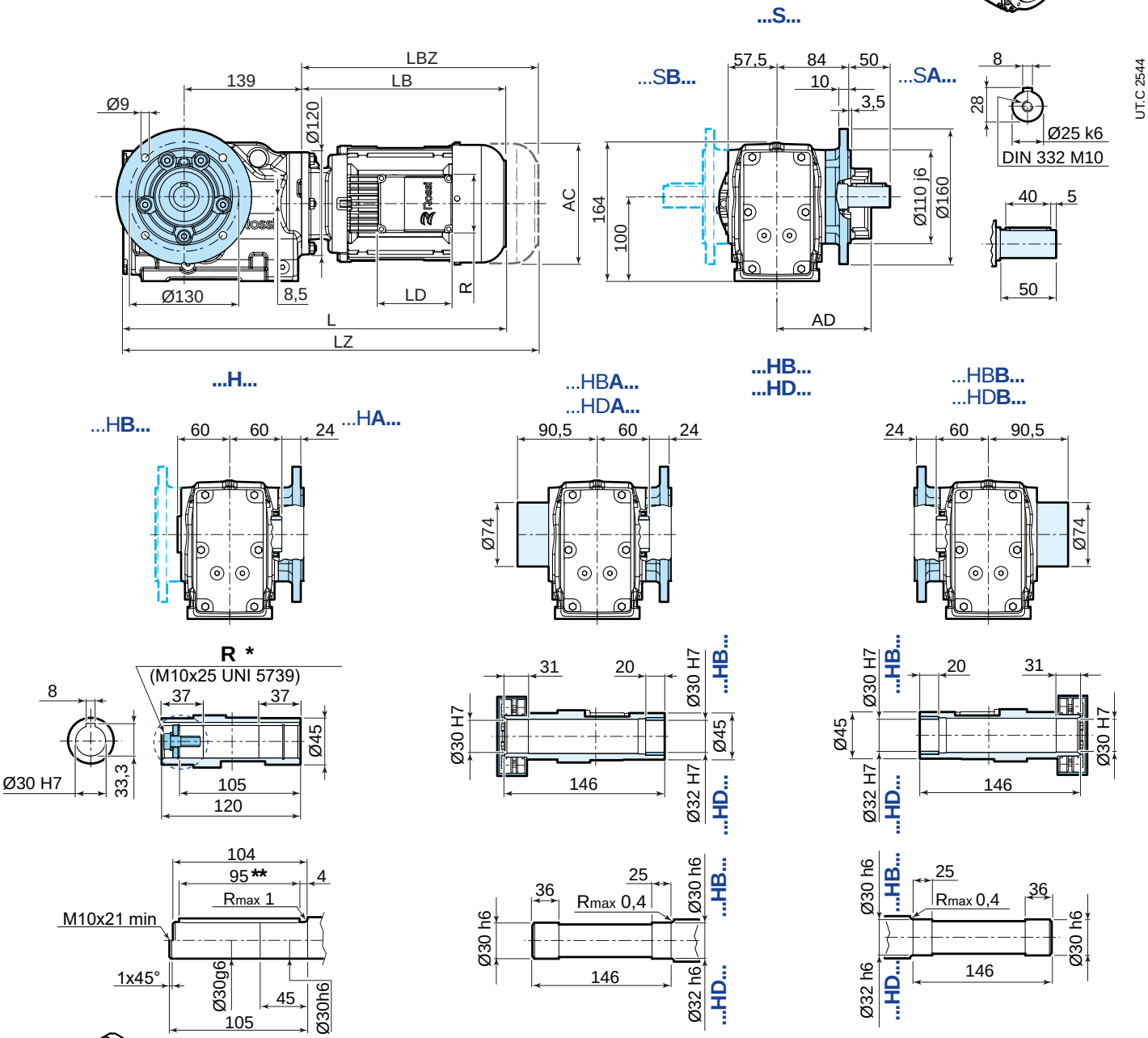

	63	71	80	90S [2]	90L	100	112
AC	123	138	156	176	176	194	218
AD	95	112	121	141	141	151	163
LB	211	237	266	290	320	351	389
LBZ	266	299	335	369	399	446	488
L [1]	422	448	477	501	531	562	600
LZ [1]	477	510	546	580	610	657	699
LD	103	103	103	136	136	136	136
R	86	86	86	106	106	106	106

153
74
208

[1] See also pages 80, 81.
[2] For motors HB3-HB3Z 90S 2, HB3-HB3Z 90S 4 dimensions as motor size 90L.

For details about drive end **A** and **B** see page 39.
* options on request.
** both version with key

[1] see also pages 80/81
* options on demand

For details of **A** and **B** machine sides see pa

iO 373 SE

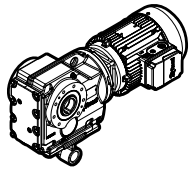

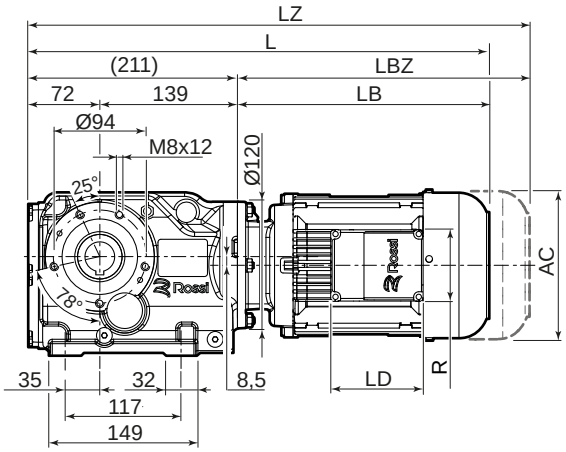

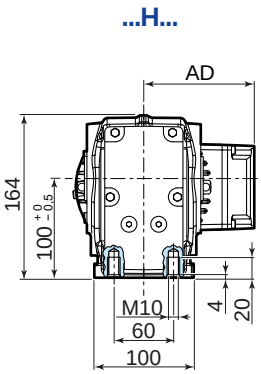

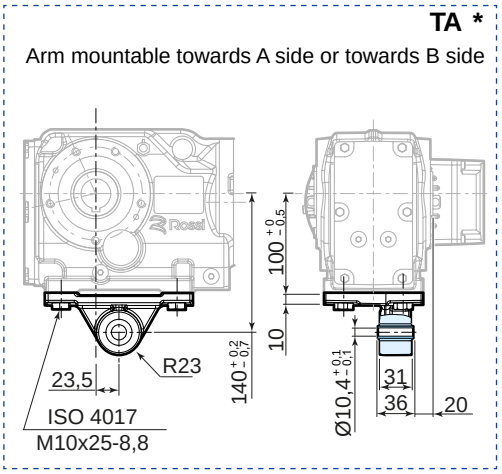

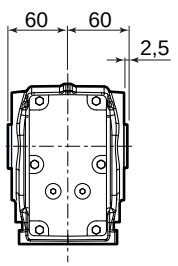

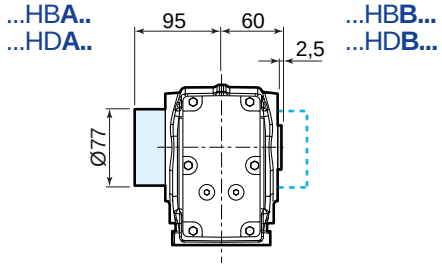

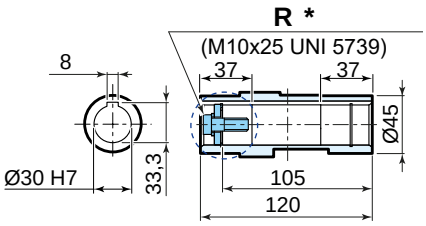

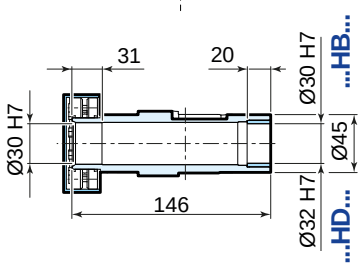

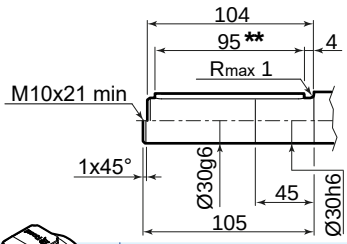

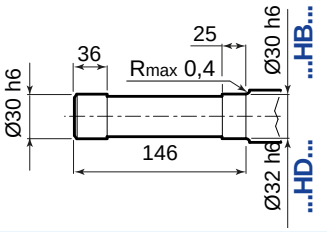

UT.C 2545

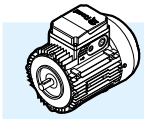

	63	71	80	90S [2]	90L	100	112
AC	123	138	156	176	176	194	218
AD	95	112	121	141	141	151	163
LB	211	237	266	290	320	351	389
LBZ	266	299	335	369	399	446	488
L [1]	422	448	477	501	531	562	600
LZ [1]	477	510	546	580	610	657	699
LD	103	103	103	136	136	136	136
R	86	86	86	106	106	106	106

153
74
208

[1] See also pages 80, 81.
[2] For motors HB3-HB3Z 90S 2, HB3-HB3Z 90S 4 dimensions as motor size 90L.

For details about drive end **A** and **B** see page 39.
* options on request.
** both version with key

iO 473 PE

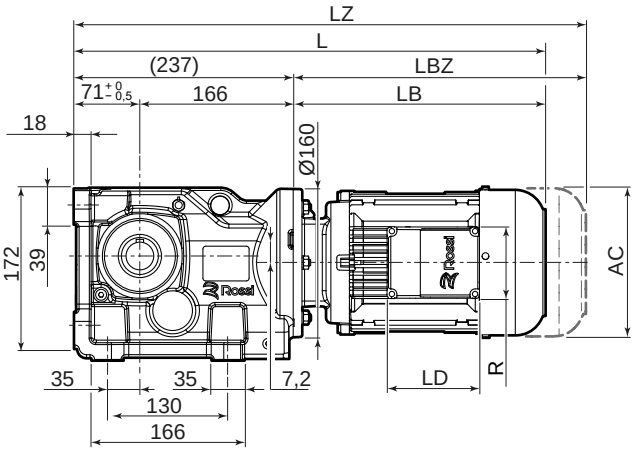

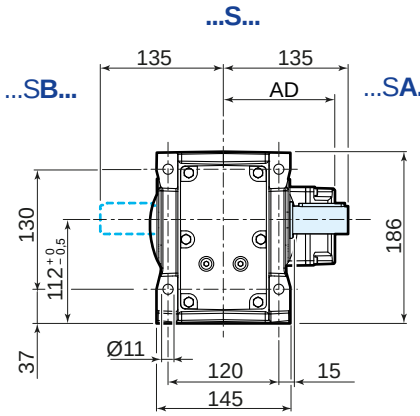

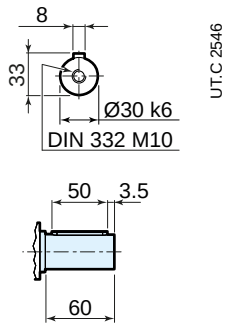

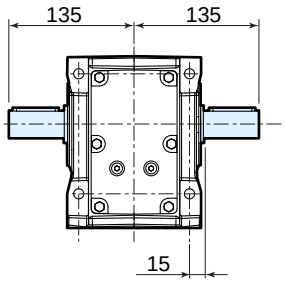

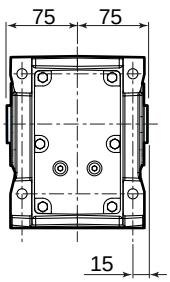

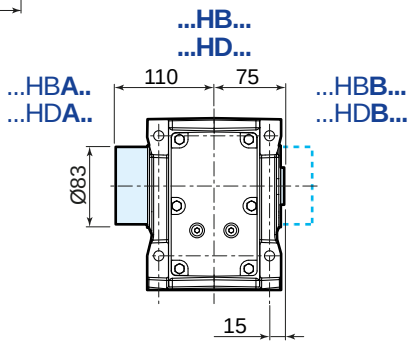

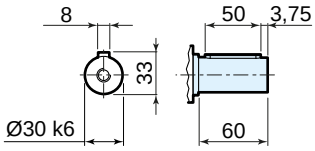

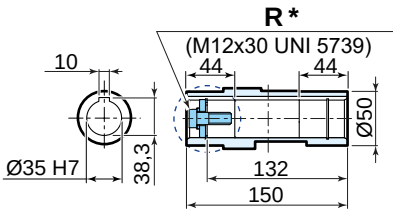

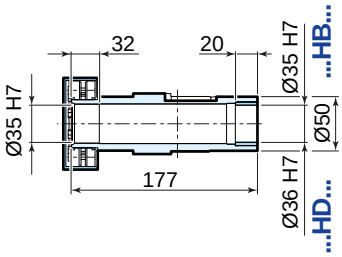

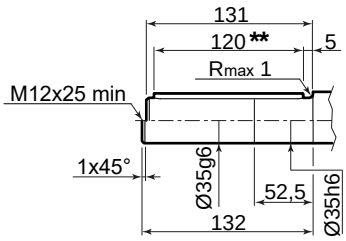

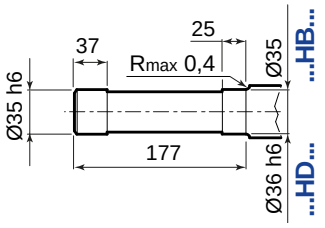

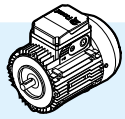

	63	71	80	90S [2]	90L	100	112
AC	123	138	156	176	176	194	218
AD	95	112	121	141	141	151	163
LB	211	237	266	290	320	351	389
LBZ	266	299	335	369	399	446	488
L [1]	448	474	503	527	557	588	626
LZ [1]	503	536	572	606	636	683	725
LD	103	103	103	136	136	136	136
R	86	86	86	106	106	106	106

153

74

208

[1] See also pages 80, 81.
[2] For motors HB3-HB3Z 90S 2, HB3-HB3Z 90S 4 dimensions as motor size 90L.

For details about drive end **A** and **B** see page 39.
* options on request.
** both version with key

iO 473 FE...F420

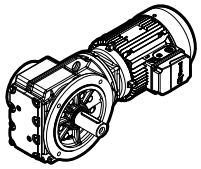

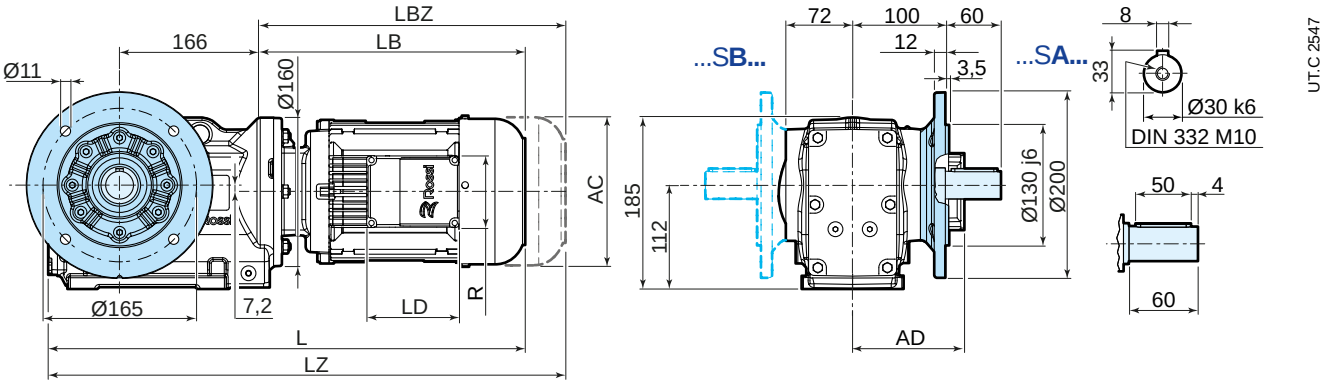

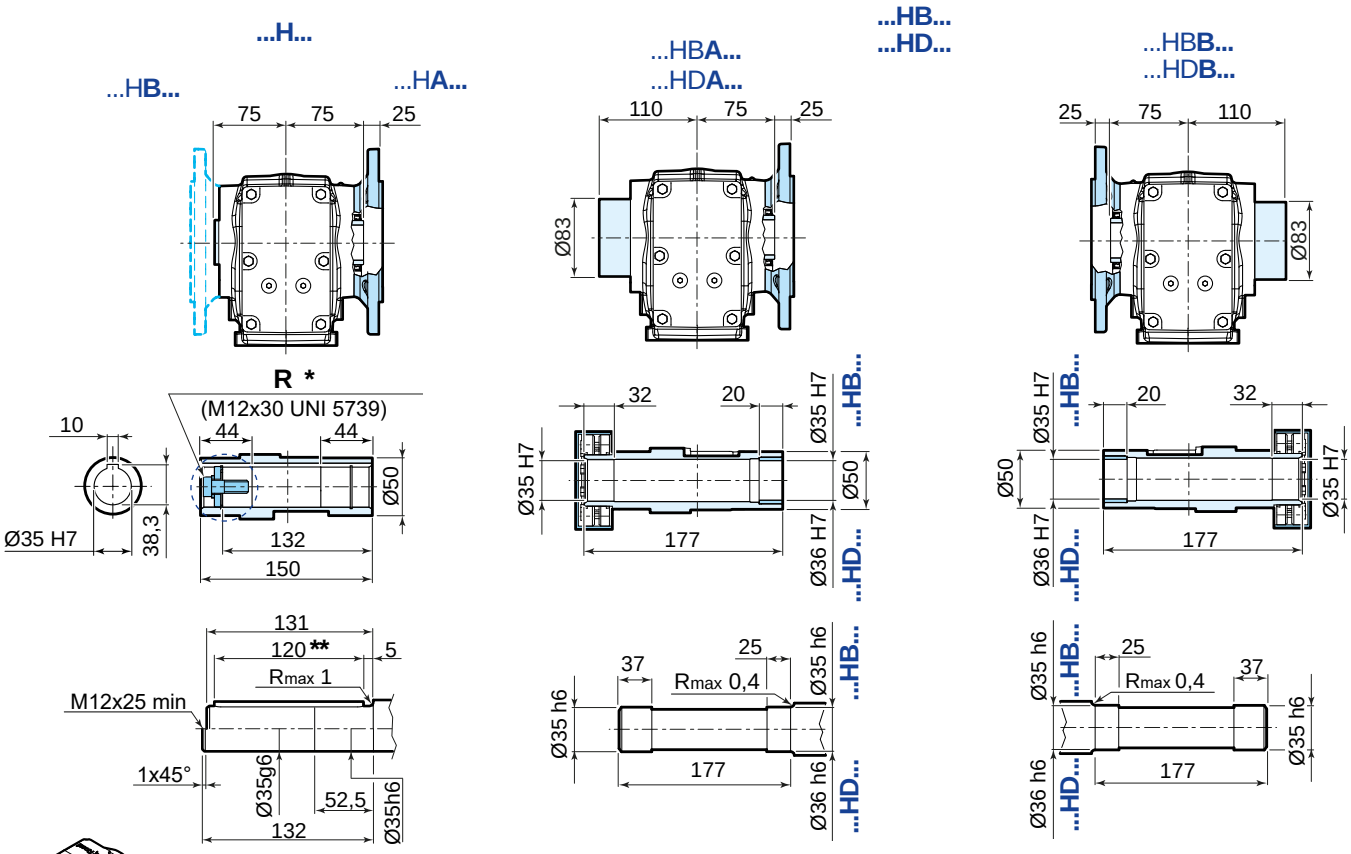

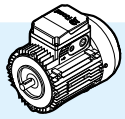

	63	71	80	90S [2]	90L	100	112
AC	123	138	156	176	176	194	218
AD	95	112	121	141	141	151	163
LB	211	237	266	290	320	351	389
LBZ	266	299	335	369	399	446	488
L [1]	454	480	509	533	563	594	632
LZ [1]	509	542	578	612	642	689	731
LD	103	103	103	136	136	136	136
R	86	86	86	106	106	106	106

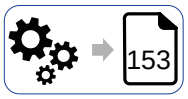
153

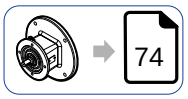
74

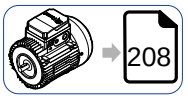
208

[1] See also pages 80, 81.
[2] For motors HB3-HB3Z 90S 2, HB3-HB3Z 90S 4 dimensions as motor size 90L.

For details about drive end **A** and **B** see page 39.
* options on request.
** both version with key

iO 473 SE

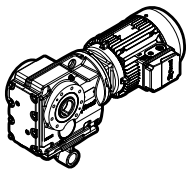

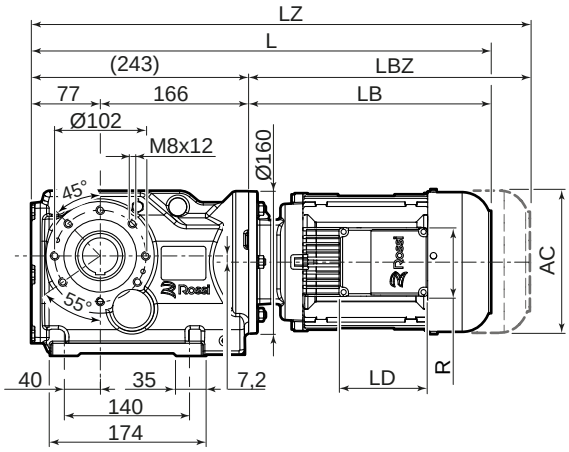

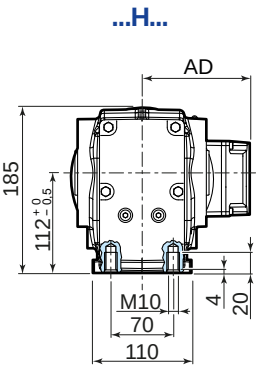

TA *

Arm mountable towards A side or towards B side

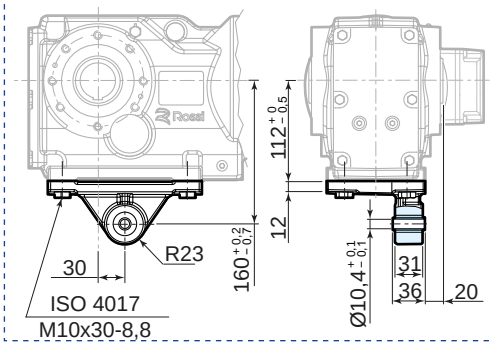

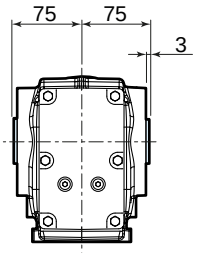

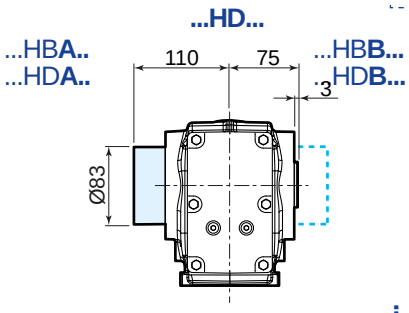

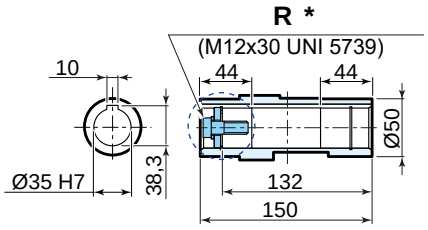

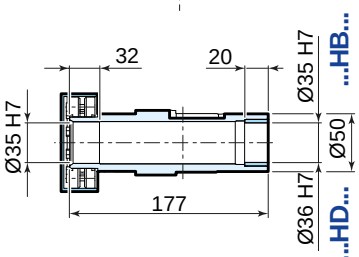

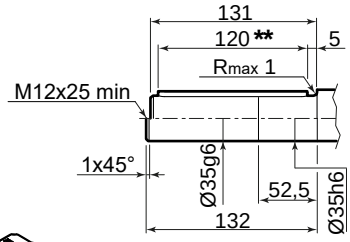

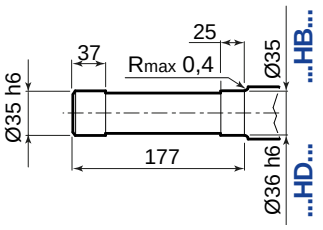

UT.C 2548

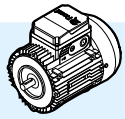

	63	71	80	90S [2]	90L	100	112
AC	123	138	156	176	176	194	218
AD	95	112	121	141	141	151	163
LB	211	237	266	290	320	351	389
LBZ	266	299	335	369	399	446	488
L [1]	454	480	509	533	563	594	632
LZ [1]	509	542	578	612	642	689	731
LD	103	103	103	136	136	136	136
R	86	86	86	106	106	106	106

153
74
208

[1] See also pages 80, 81.
[2] For motors HB3-HB3Z 90S 2, HB3-HB3Z 90S 4 dimensions as motor size 90L.

For details about drive end **A** and **B** see page 39.
* options on request.
** both version with key

12.3

iO 573 PE

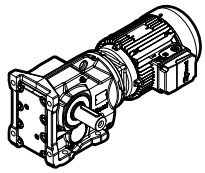

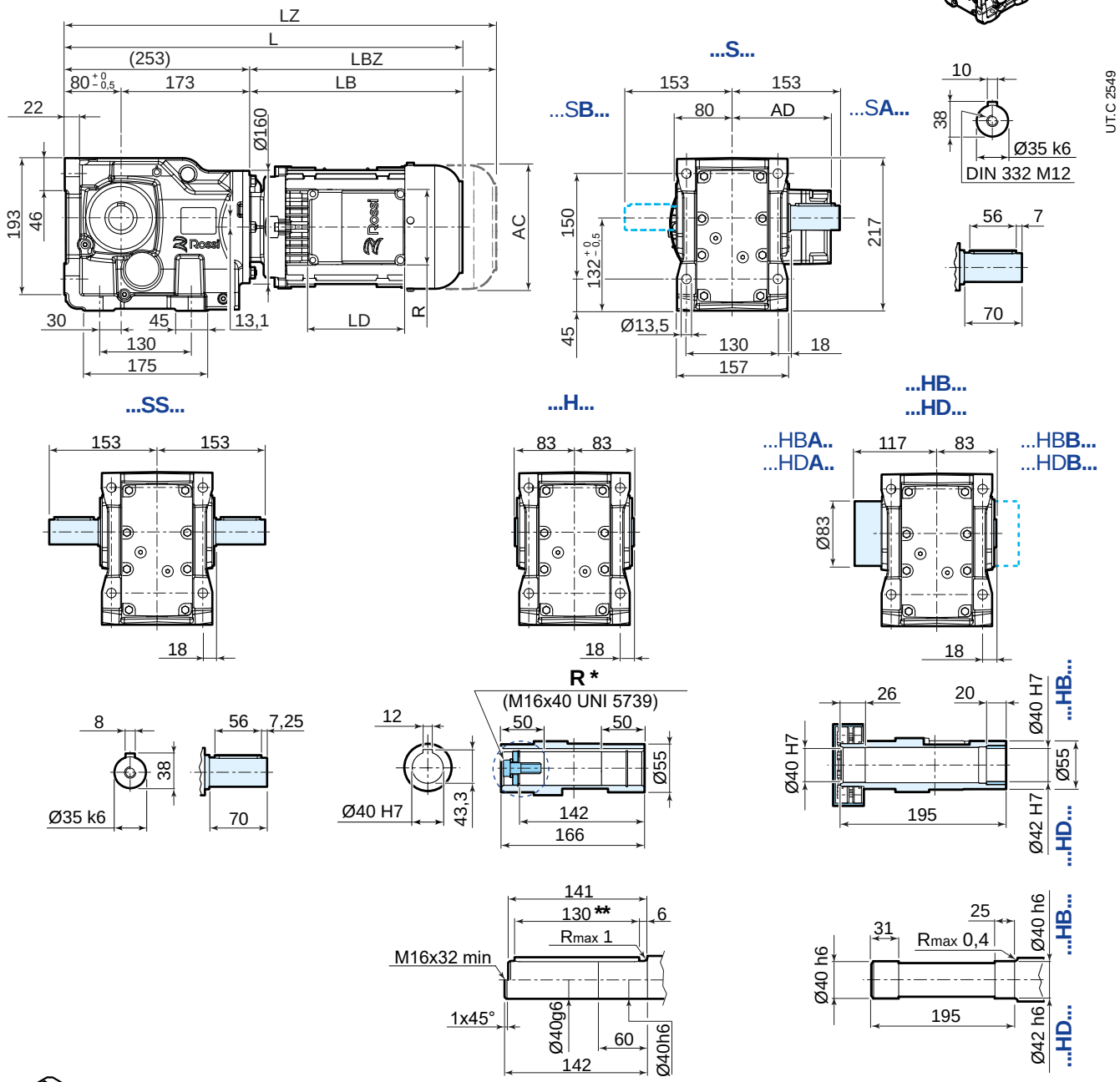

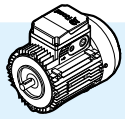

	63	71	80	90S [2]	90L	100	112	132S [3]	132M
AC	123	138	156	176	176	194	218	257	257
AD	95	112	121	141	141	151	163	194	194
LB	205	231	260	283	313	345	383	439	499
LBZ	260	293	329	362	392	440	482	547	607
L [1]	458	484	513	536	566	598	636	692	752
LZ [1]	513	546	582	615	645	693	735	800	860
LD	103	103	103	136	136	136	136	190	190
R	86	86	86	106	106	106	106	148	148

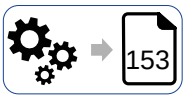
153

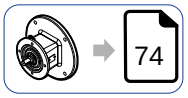
74

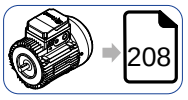
208

[1] See also pages 80, 81.
[2] For motors HB3-HB3Z 90S 2, HB3-HB3Z 90S 4 dimensions as motor size 90L.
[3] For motors HB3-HB3Z 132 SB 2, HB3-HB3Z 132SC 2, HB3-HB3Z 132S 4 dimensions as motor size 132M

For details about drive end **A** and **B** see page 39.
* options on request.
** both version with key

Dimensional drawings - iO

iO 573 FE...F525

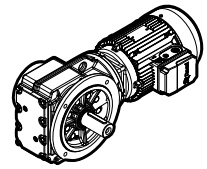

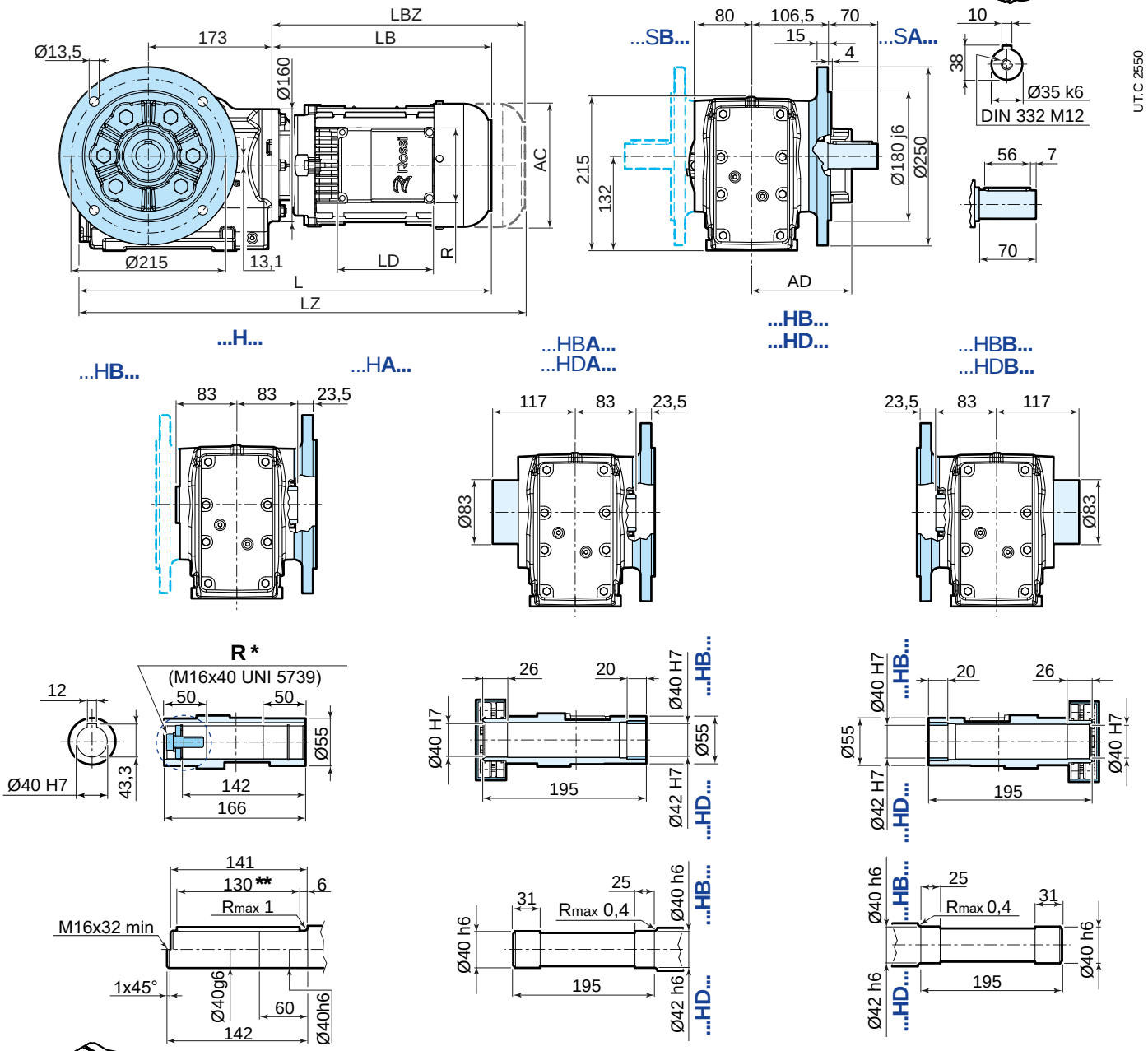

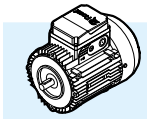

	63	71	80	90S [2]	90L	100	112	132S [3]	132M
AC	123	138	156	176	176	194	218	257	257
AD	95	112	121	141	141	151	163	194	194
LB	205	231	260	283	313	345	383	439	499
LBZ	260	293	329	362	392	440	482	547	607
L [1]	474	500	529	552	582	614	652	708	768
LZ [1]	529	562	598	631	661	709	751	816	876
LD	103	103	103	136	136	136	136	190	190
R	86	86	86	106	106	106	106	148	148

153
74
208

[1] See also pages 80, 81.
[2] For motors HB3-HB3Z 90S 2, HB3-HB3Z 90S 4 dimensions as motor size 90L.
[3] For motors HB3-HB3Z 132 SB 2, HB3-HB3Z 132SC 2, HB3-HB3Z 132S 4 dimensions as motor size 132M

For details about drive end **A** and **B** see page 39.
* options on request.
** both version with key

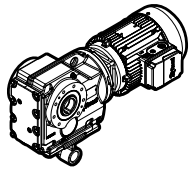

iO 573 SE

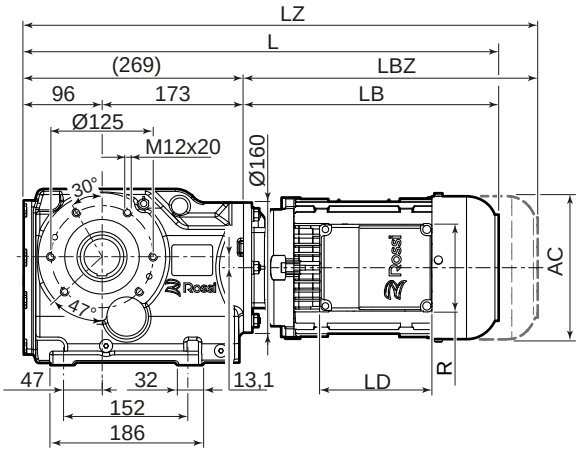

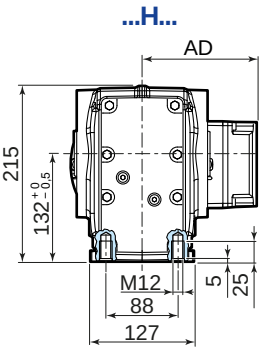

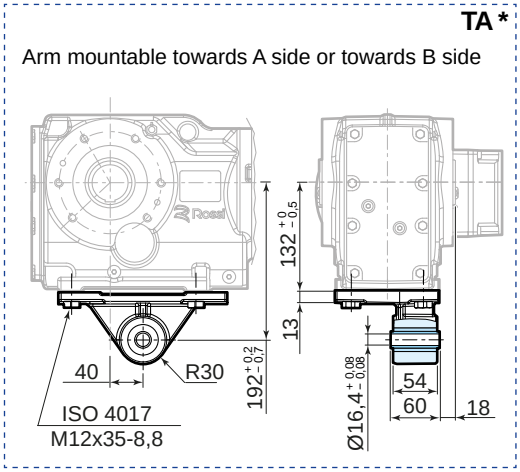

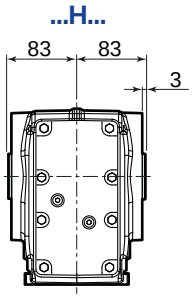

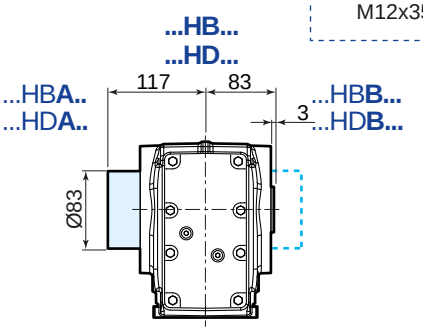

UT.C 2551

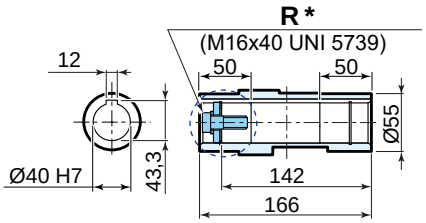

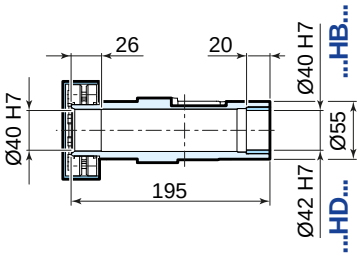

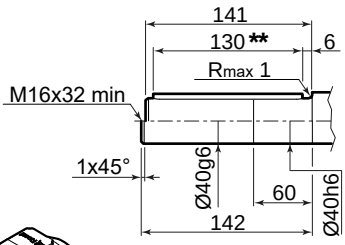

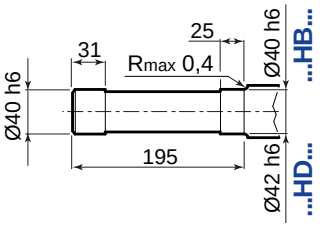

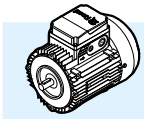

	63	71	80	90S [2]	90L	100	112	132S [3]	132M
AC	123	138	156	176	176	194	218	257	257
AD	95	112	121	141	141	151	163	194	194
LB	205	231	260	283	313	345	383	439	499
LBZ	260	293	329	362	392	440	482	547	607
L [1]	474	500	529	552	582	614	652	708	768
LZ [1]	529	562	598	631	661	709	751	816	876
LD	103	103	103	136	136	136	136	190	190
R	86	86	86	106	106	106	106	148	148

153
74
208

[1] See also pages 80, 81.
[2] For motors HB3-HB3Z 90S 2, HB3-HB3Z 90S 4 dimensions as motor size 90L.
[3] For motors HB3-HB3Z 132 SB 2, HB3-HB3Z 132SC 2, HB3-HB3Z 132S 4 dimensions as motor size 132M

For details about drive end **A** and **B** see page 39.
* options on request.
** both version with key

12.4

iO 673 PE

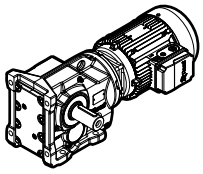

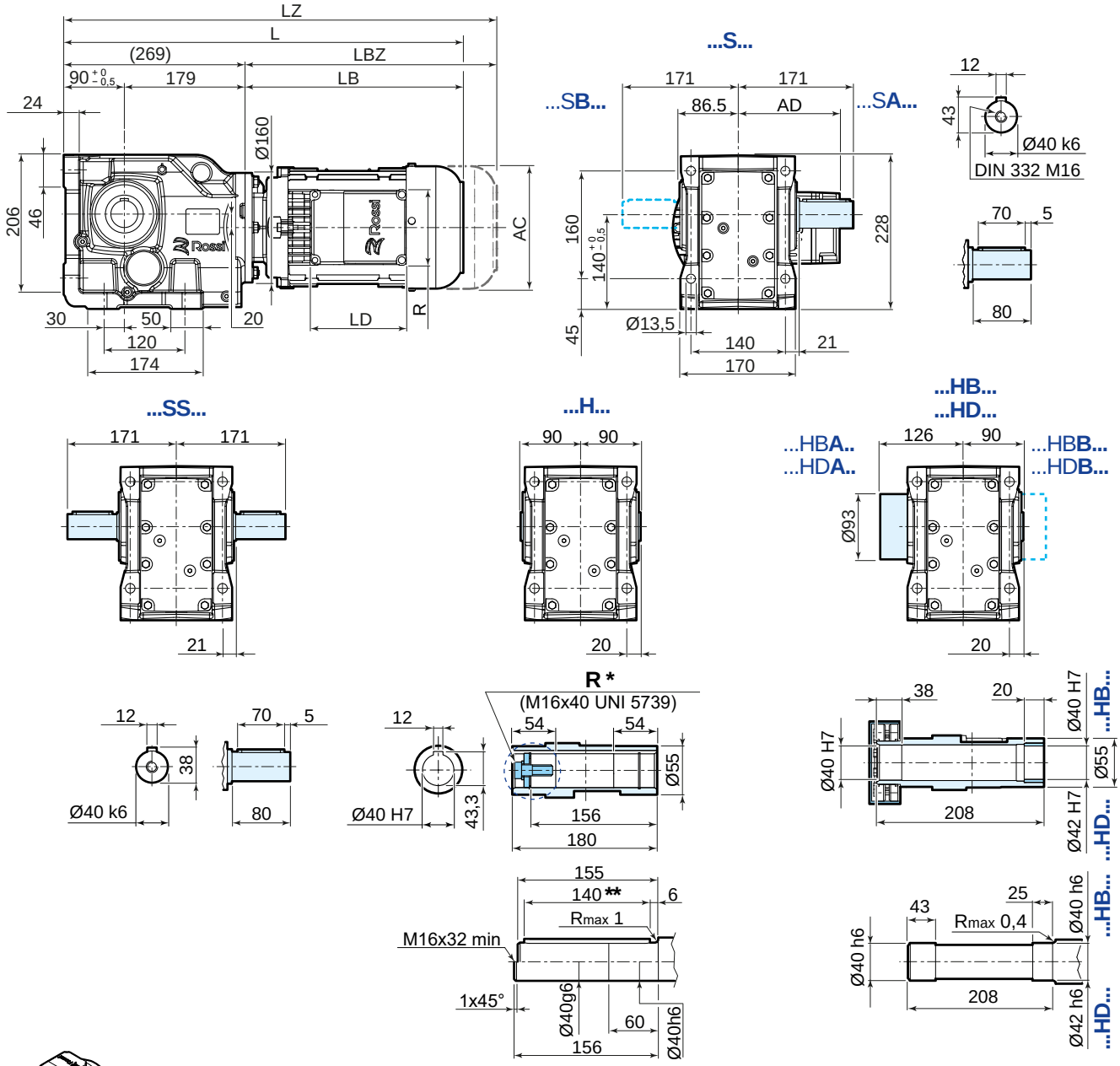

	63	71	80	90S [2]	90L	100	112	132S [3]	132M
AC	123	138	156	176	176	194	218	257	257
AD	95	112	121	141	141	151	163	194	194
LB	205	231	260	283	313	345	383	439	499
LBZ	260	293	329	362	392	440	482	547	607
L [1]	474	500	529	552	582	614	652	708	768
LZ [1]	529	562	598	631	661	709	751	816	876
LD	103	103	103	136	136	136	136	190	190
R	86	86	86	106	106	106	106	148	148

153
74
208

[1] See also pages 80, 81.
[2] For motors HB3-HB3Z 90S 2, HB3-HB3Z 90S 4 dimensions as motor size 90L.
[3] For motors HB3-HB3Z 132 SB 2, HB3-HB3Z 132SC 2, HB3-HB3Z 132S 4 dimensions as motor size 132M

For details about drive end **A** and **B** see page 39.
* options on request.
** both version with key

iO 673 FE...F625

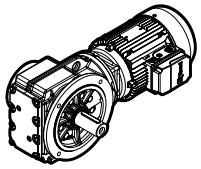

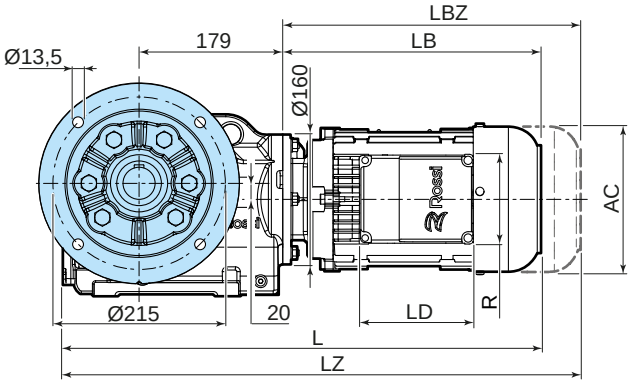

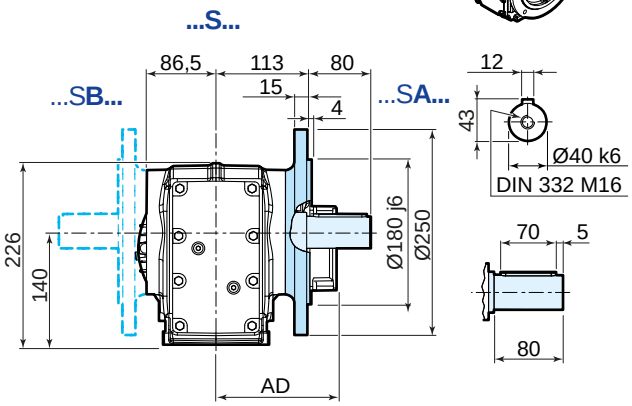

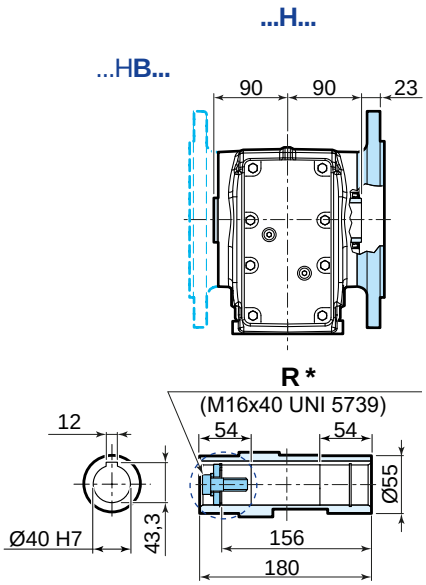

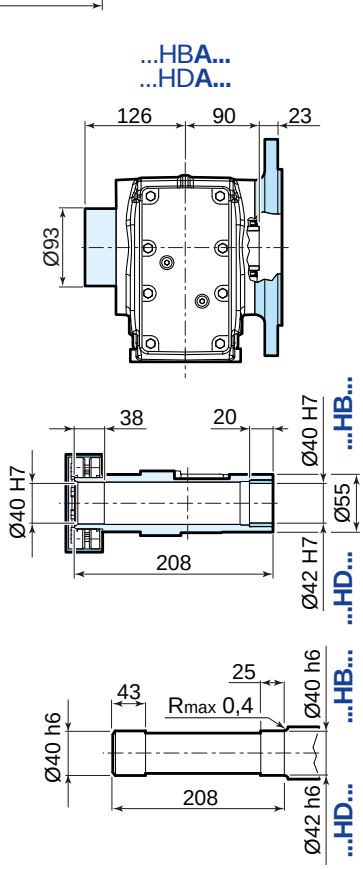

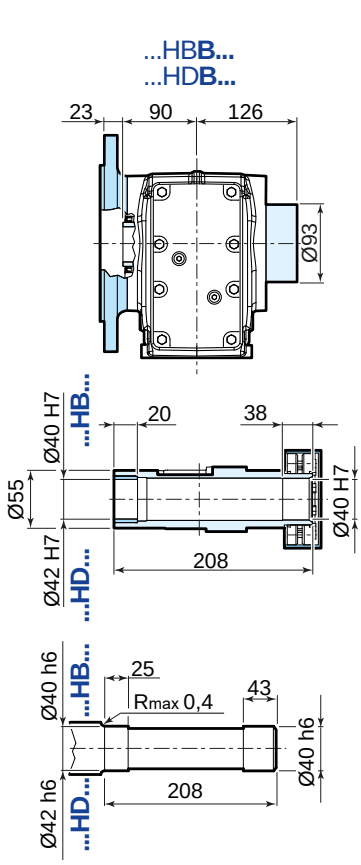

	63	71	80	90S [2]	90L	100	112	132S [3]	132M
AC	123	138	156	176	176	194	218	257	257
AD	95	112	121	141	141	151	163	194	194
LB	205	231	260	283	313	345	383	439	499
LBZ	260	293	329	362	392	440	482	547	607
L [1]	479	505	534	557	587	619	657	713	773
LZ [1]	534	567	603	636	666	714	756	821	881
LD	103	103	103	136	136	136	136	190	190
R	86	86	86	106	106	106	106	148	148

153
74
208

[1] See also pages 80, 81.
[2] For motors HB3-HB3Z 90S 2, HB3-HB3Z 90S 4 dimensions as motor size 90L.
[3] For motors HB3-HB3Z 132 SB 2, HB3-HB3Z 132SC 2, HB3-HB3Z 132S 4 dimensions as motor size 132M.

For details about drive end **A** and **B** see page 39.
* options on request.
** both version with key

iO 673 SE

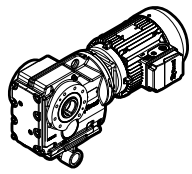

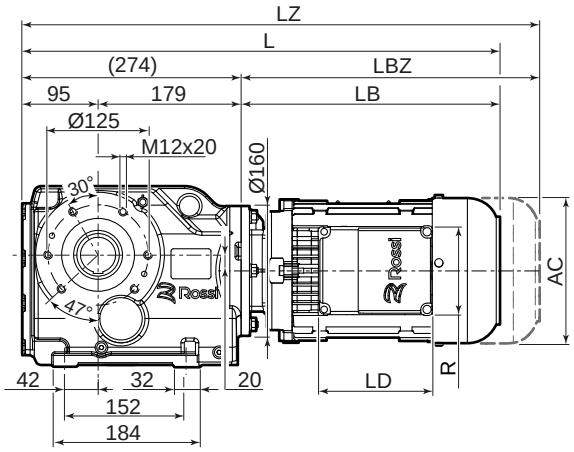

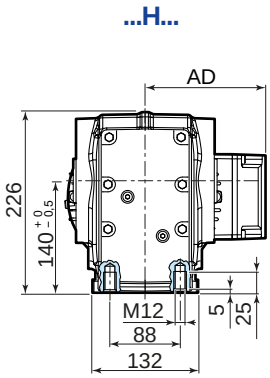

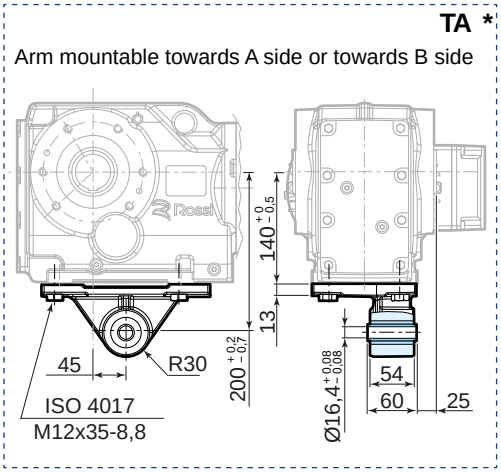

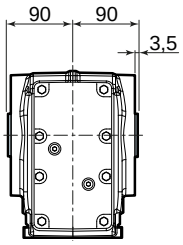

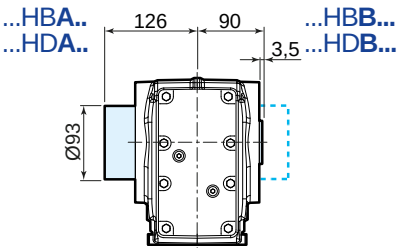

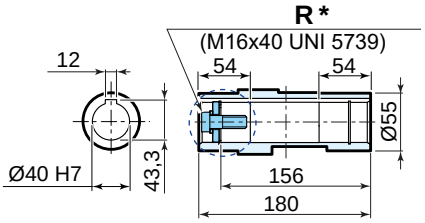

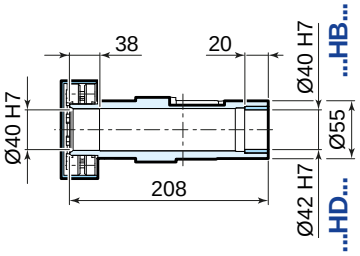

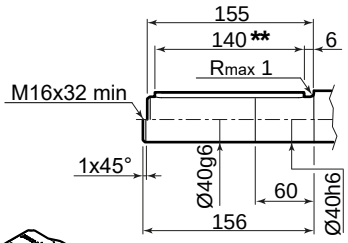

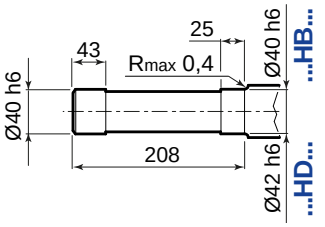

UT.C 2554

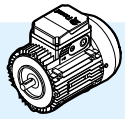

	63	71	80	90S [2]	90L	100	112	132S [3]	132M
AC	123	138	156	176	176	194	218	257	257
AD	95	112	121	141	141	151	163	194	194
LB	205	231	260	283	313	345	383	439	499
LBZ	260	293	329	362	392	440	482	547	607
L [1]	479	505	534	557	587	619	657	713	773
LZ [1]	534	567	603	636	666	714	756	821	881
LD	103	103	103	136	136	136	136	190	190
R	86	86	86	106	106	106	106	148	148

153
74
208

[1] See also pages 80, 81.
[2] For motors HB3-HB3Z 90S 2, HB3-HB3Z 90S 4 dimensions as motor size 90L.
[3] For motors HB3-HB3Z 132 SB 2, HB3-HB3Z 132SC 2, HB3-HB3Z 132S 4 dimensions as motor size 132M

For details about drive end **A** and **B** see page 39.
* options on request.
** both version with key

12.5

iO 773 PE

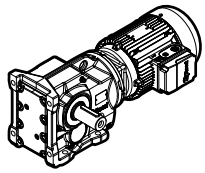

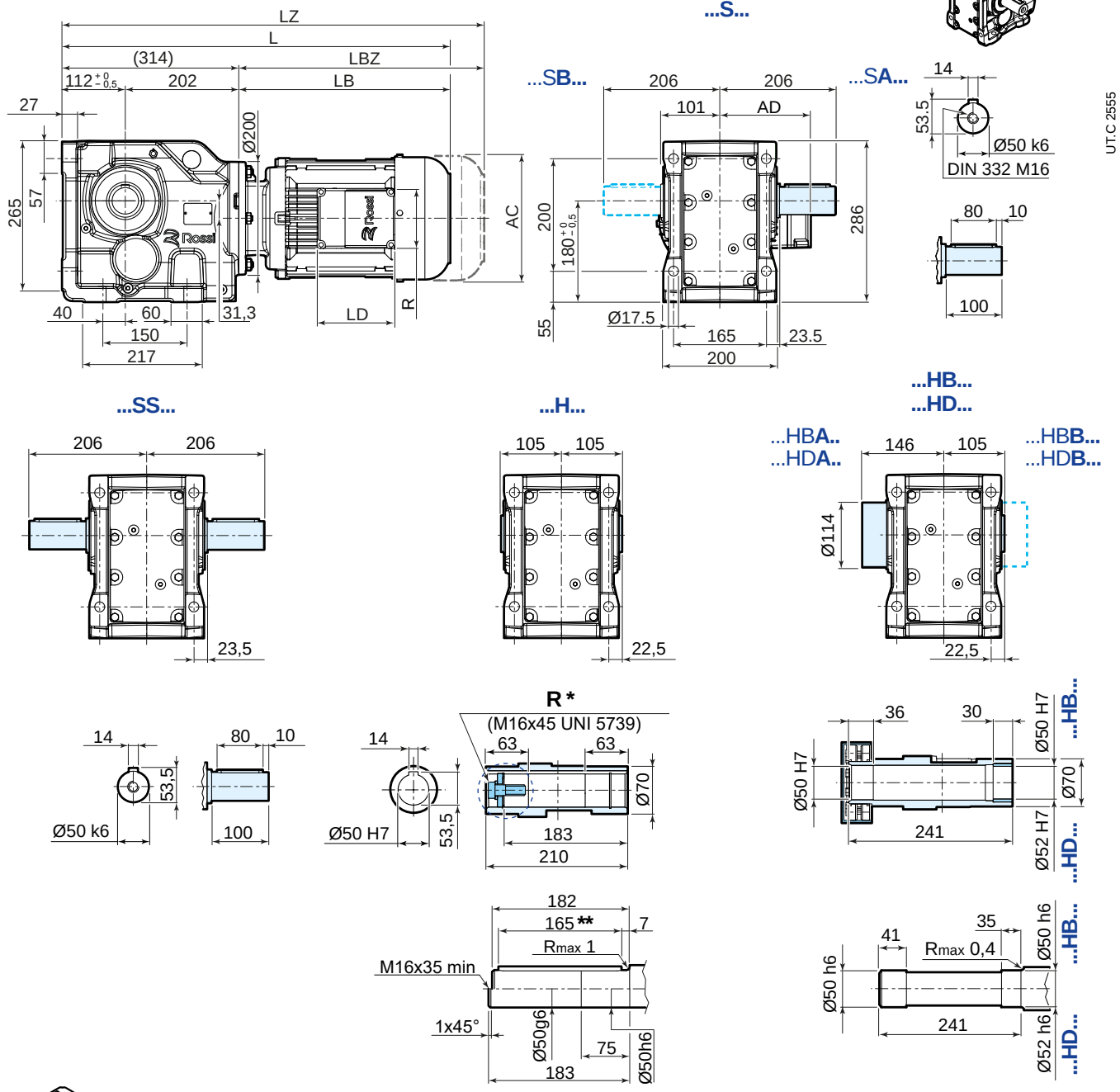

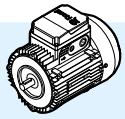

	63	71	80	90S [2]	90L	100	112	132S [3]	132M
AC	123	138	156	176	176	194	218	257	257
AD	95	112	121	141	141	151	163	194	194
LB	199	225	254	276	306	339	377	433	493
LBZ	254	287	323	355	385	434	476	541	601
L [1]	513	539	568	590	620	653	691	747	807
LZ [1]	568	601	637	669	699	748	790	855	915
LD	103	103	103	136	136	136	136	190	190
R	86	86	86	106	106	106	106	148	148

153
74
208

[1] See also pages 80, 81.
[2] For motors HB3-HB3Z 90S 2, HB3-HB3Z 90S 4 dimensions as motor size 90L.
[3] For motors HB3-HB3Z 132 SB 2, HB3-HB3Z 132SC 2, HB3-HB3Z 132S 4 dimensions as motor size 132M

For details about drive end **A** and **B** see page 39.
* options on request.
** both version with key

iO 773 FE...F730

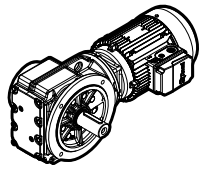

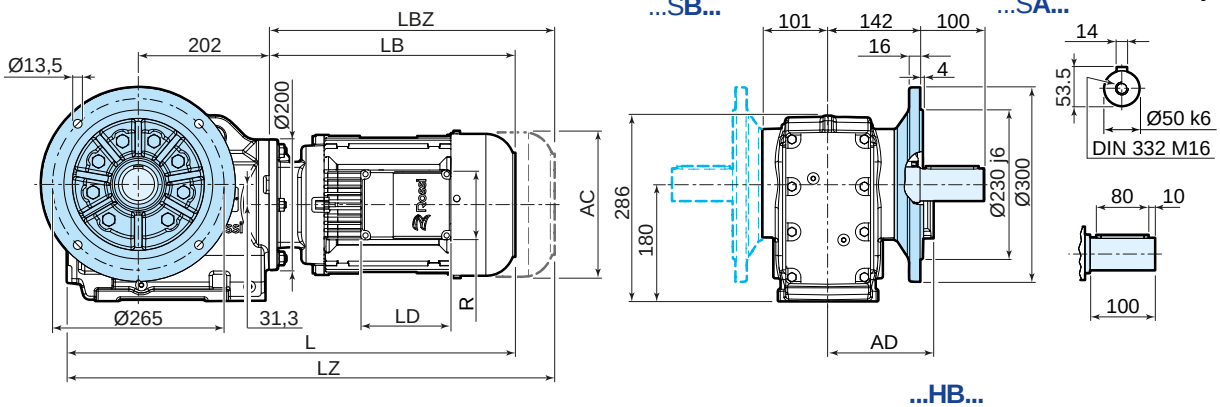

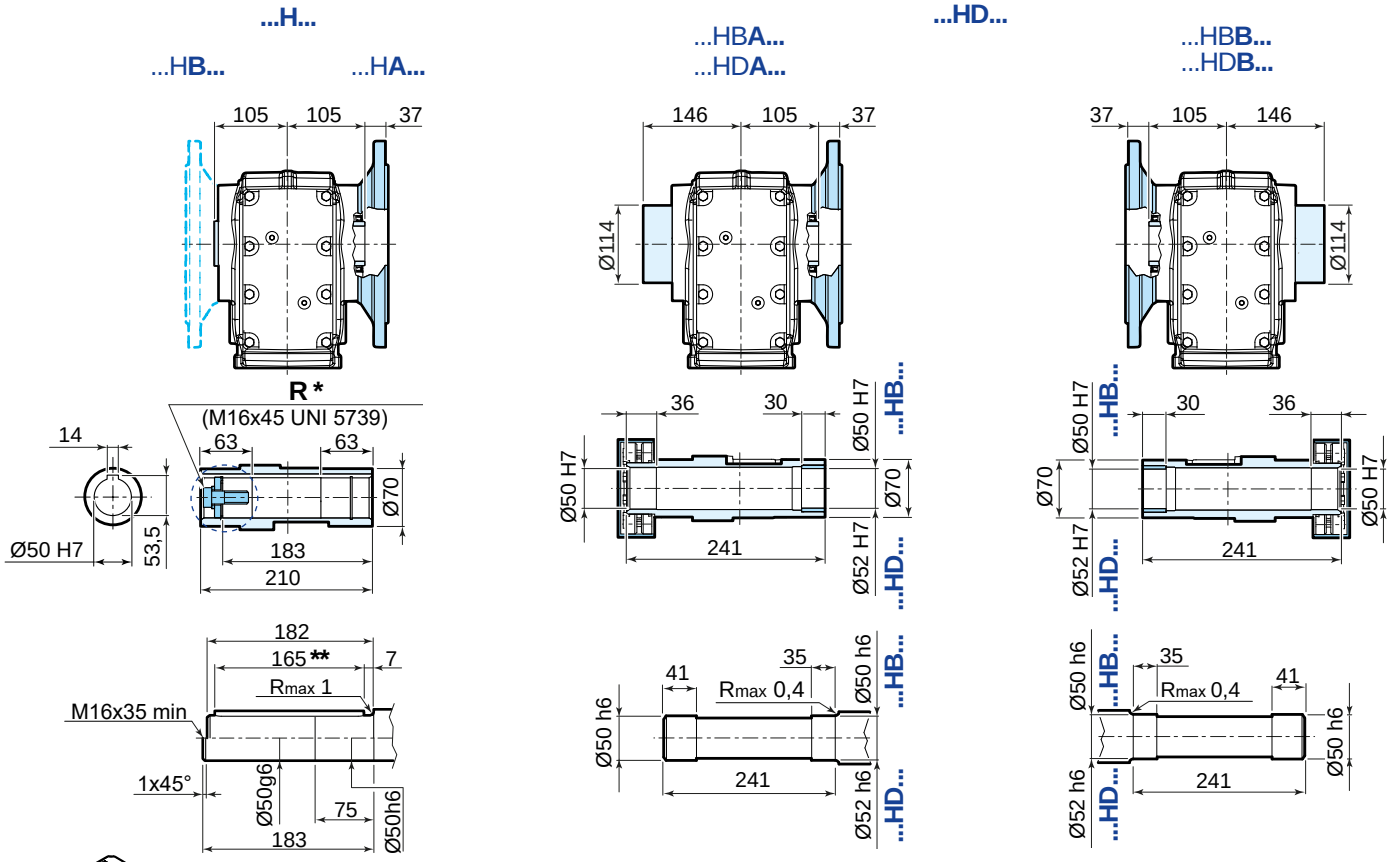

	63	71	80	90S [2]	90L	100	112	132S [3]	132M
AC	123	138	156	176	176	194	218	257	257
AD	95	112	121	141	141	151	163	194	194
LB	199	225	254	276	306	339	377	433	493
LBZ	254	287	323	355	385	434	476	541	601
L [1]	511	537	566	588	618	651	689	745	805
LZ [1]	566	599	635	667	697	746	788	853	913
LD	103	103	103	136	136	136	136	190	190
R	86	86	86	106	106	106	106	148	148

153
74
208

[1] See also pages 80, 81.
[2] For motors HB3-HB3Z 90S 2, HB3-HB3Z 90S 4 dimensions as motor size 90L.
[3] For motors HB3-HB3Z 132 SB 2, HB3-HB3Z 132SC 2, HB3-HB3Z 132S 4 dimensions as motor size 132M

For details about drive end **A** and **B** see page 39.
* options on request.
** both version with key

iO 773 SE

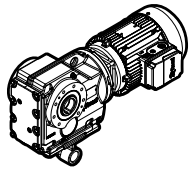

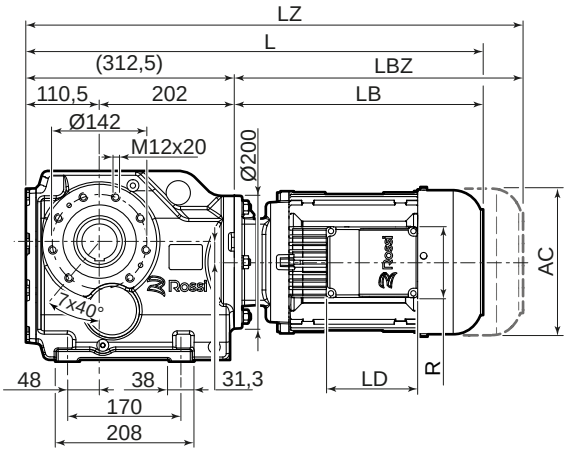

...H...

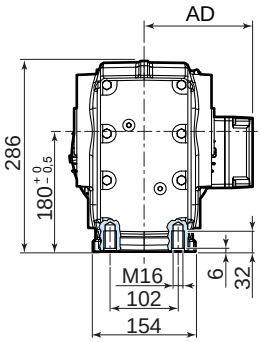

TA *

Arm mountable towards A side or towards B side

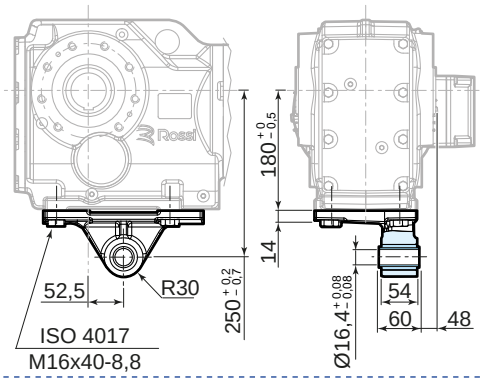

...HB...
...HD...

...H...

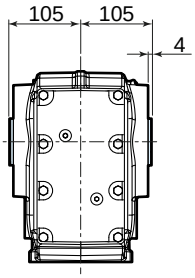

...HB**A**..
...HD**A**..

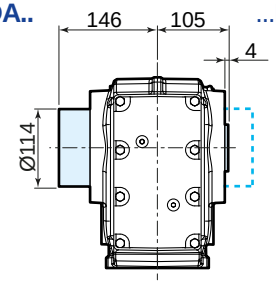

...HB**B**...
...HD**B**...

UT.C 2557

R *

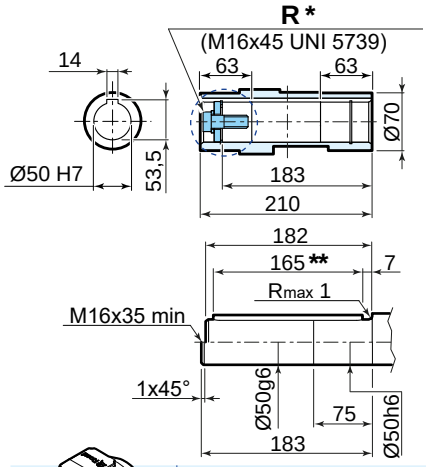

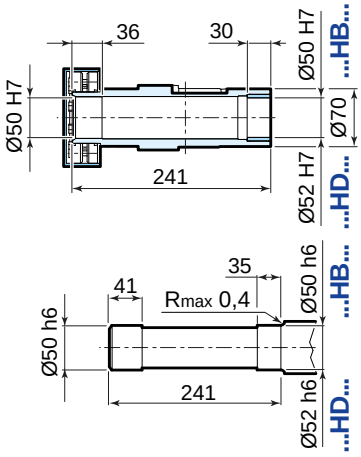

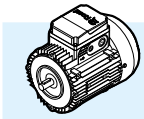

	63	71	80	90S [2]	90L	100	112	132S [3]	132M
AC	123	138	156	176	176	194	218	257	257
AD	95	112	121	141	141	151	163	194	194
LB	199	225	254	276	306	339	377	433	493
LBZ	254	287	323	355	385	434	476	541	601
L [1]	513	539	568	590	620	653	691	747	807
LZ [1]	568	601	637	669	699	748	790	855	915
LD	103	103	103	136	136	136	136	190	190
R	86	86	86	106	106	106	106	148	148

153
74
208

[1] See also pages 80, 81.
[2] For motors HB3-HB3Z 90S 2, HB3-HB3Z 90S 4 dimensions as motor size 90L.
[3] For motors HB3-HB3Z 132 SB 2, HB3-HB3Z 132SC 2, HB3-HB3Z 132S 4 dimensions as motor size 132M

For details about drive end **A** and **B** see page 39.
* options on request.
** both version with key

12.6

iO 873 PE

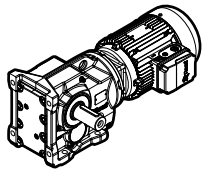

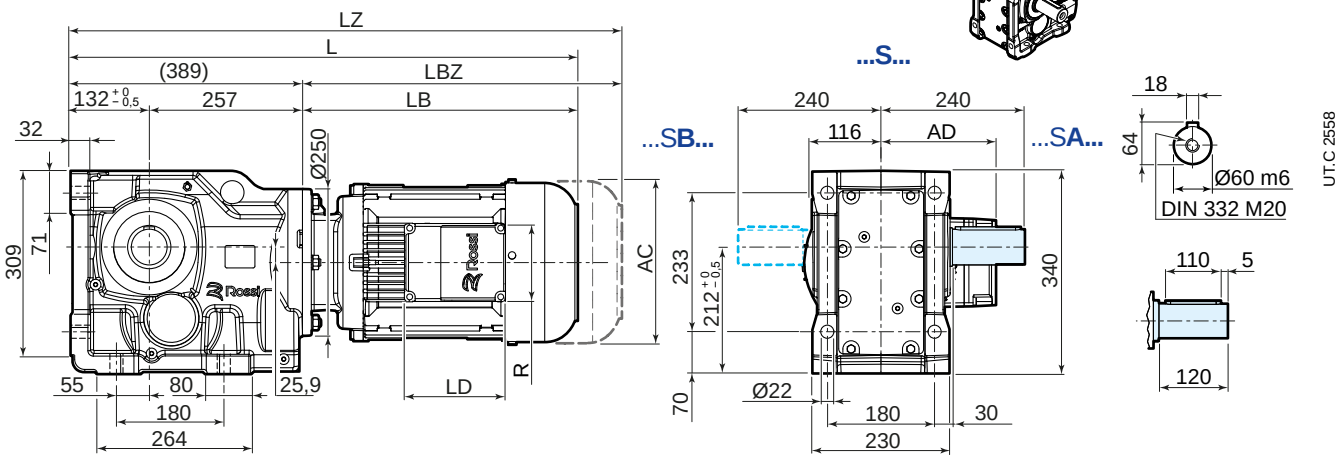

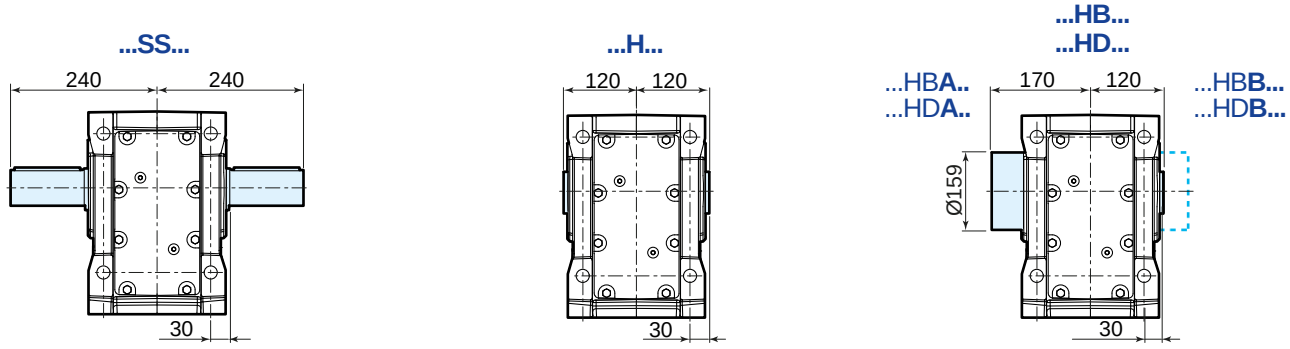

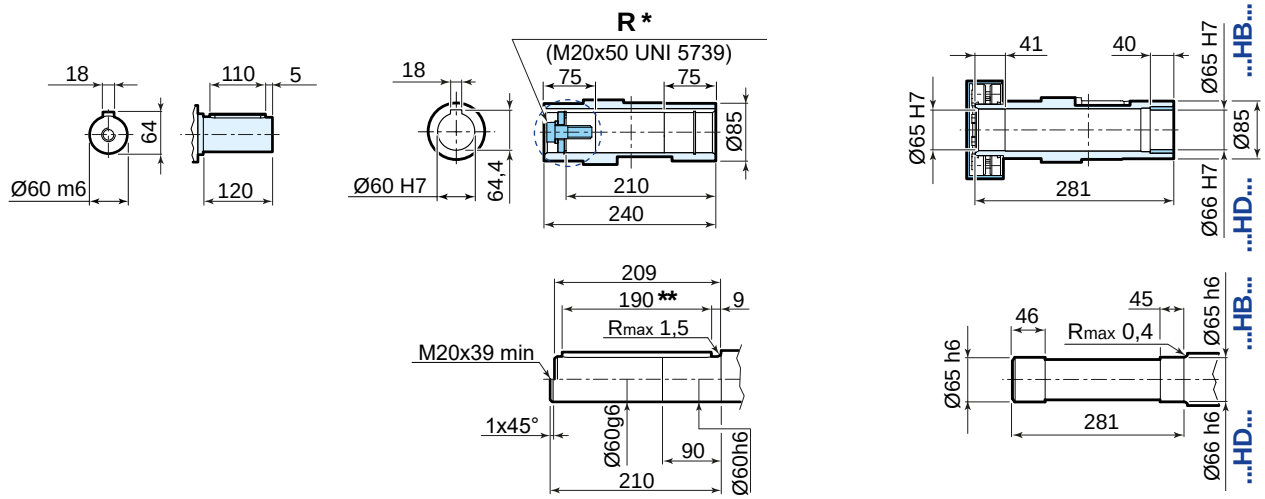

	63	71	80	90S [2]	90L	100	112	132S [3]	132M
AC	123	138	156	176	176	194	218	257	257
AD	95	112	121	141	141	151	163	194	194
LB	199	225	254	276	306	339	377	433	493
LBZ	254	287	323	355	385	434	476	541	601
L [1]	588	614	643	665	695	728	766	822	882
LZ [1]	643	676	712	744	774	823	865	930	990
LD	103	103	103	136	136	136	136	190	190
R	86	86	86	106	106	106	106	148	148

153
74
208

[1] See also pages 80, 81.
[2] For motors HB3-HB3Z 90S 2, HB3-HB3Z 90S 4 dimensions as motor size 90L.
[3] For motors HB3-HB3Z 132 SB 2, HB3-HB3Z 132SC 2, HB3-HB3Z 132S 4 dimensions as motor size 132M

For details about drive end **A** and **B** see page 39.
* options on request.
** both version with key

iO 873 FE...F835

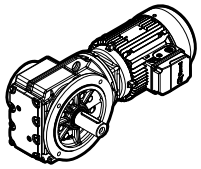

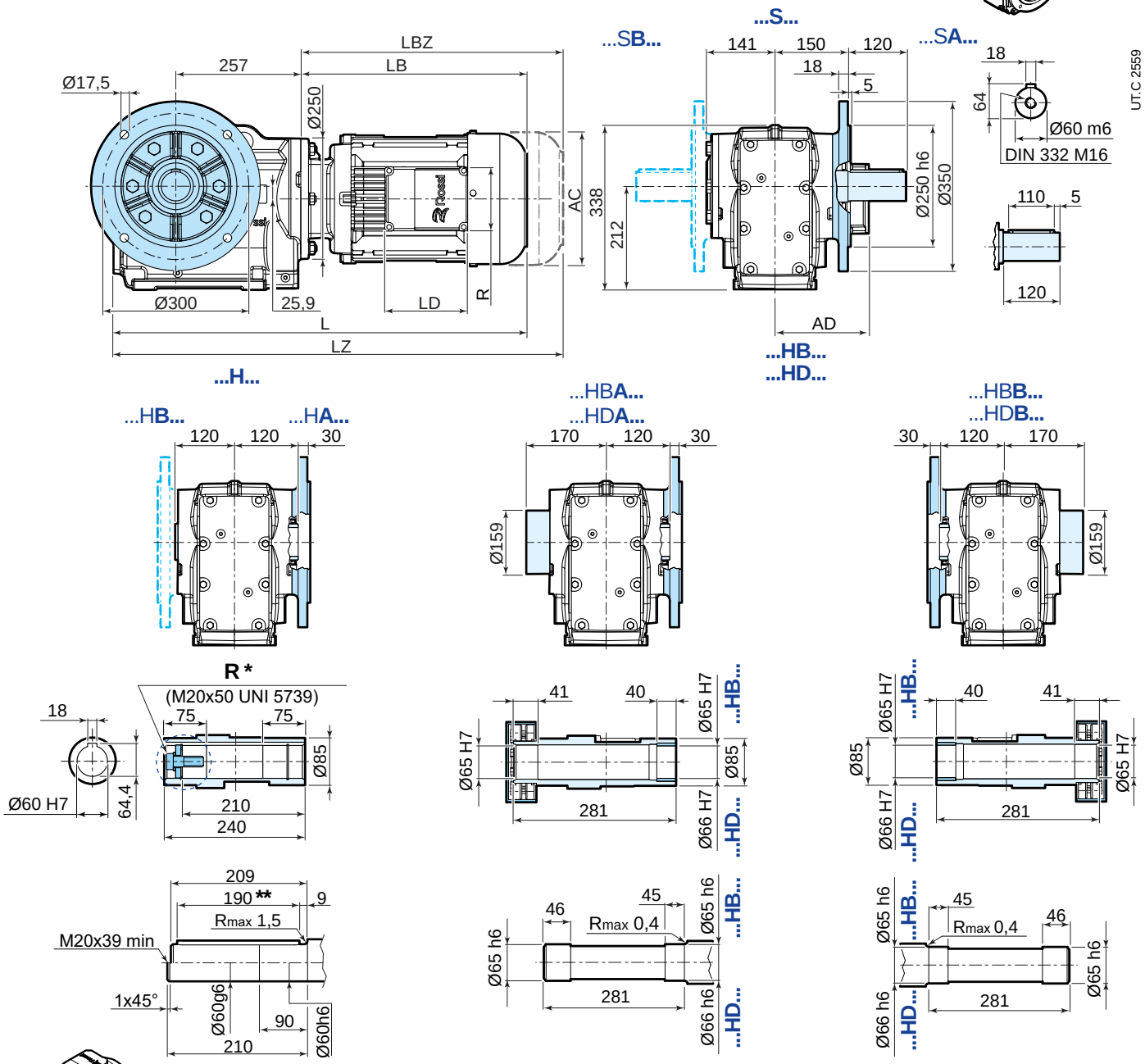

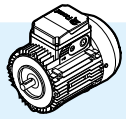

	63	71	80	90S [2]	90L	100	112	132S [3]	132M
AC	123	138	156	176	176	194	218	257	257
AD	95	112	121	141	141	151	163	194	194
LB	199	225	254	276	306	339	377	433	493
LBZ	254	287	323	355	385	434	476	541	601
L [1]	586	612	641	663	693	726	764	820	880
LZ [1]	641	674	710	742	772	821	863	928	988
LD	103	103	103	136	136	136	136	190	190
R	86	86	86	106	106	106	106	148	148

153
74
208

[1] See also pages 80, 81.
[2] For motors HB3-HB3Z 90S 2, HB3-HB3Z 90S 4 dimensions as motor size 90L.
[3] For motors HB3-HB3Z 132 SB 2, HB3-HB3Z 132SC 2, HB3-HB3Z 132S 4 dimensions as motor size 132M

For details about drive end **A** and **B** see page 39.
* options on request.
** both version with key

iO 873 SE

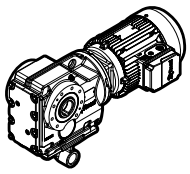

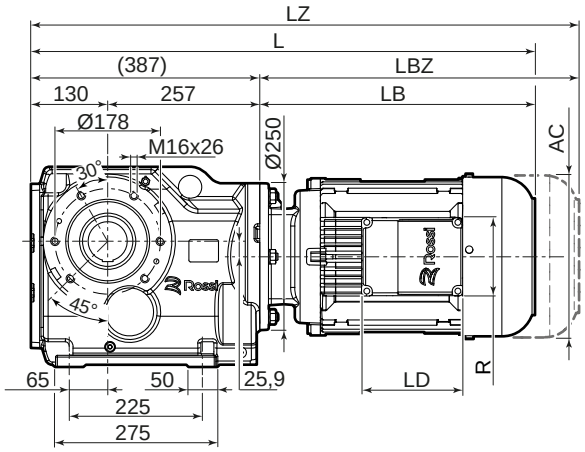

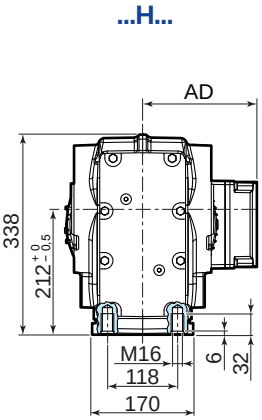

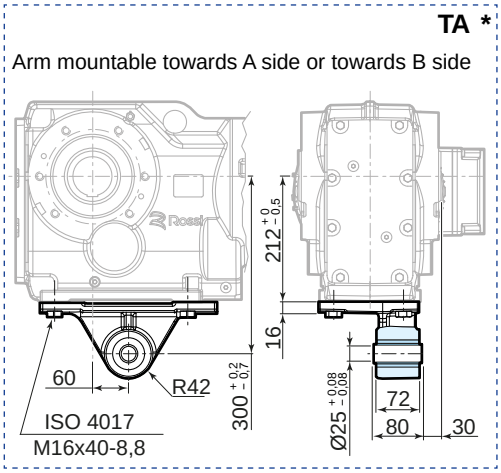

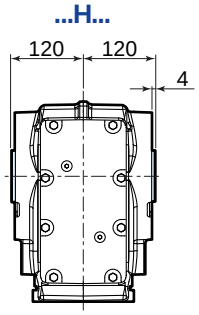

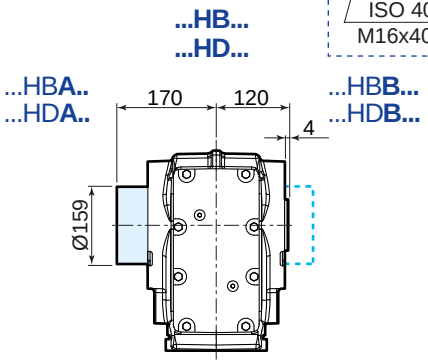

UT.C 2560

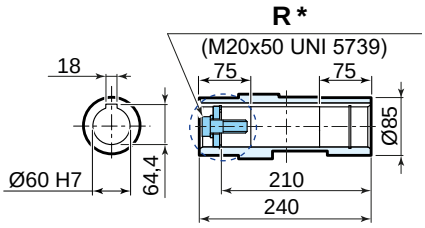

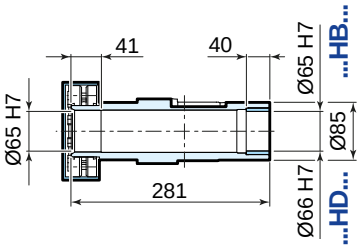

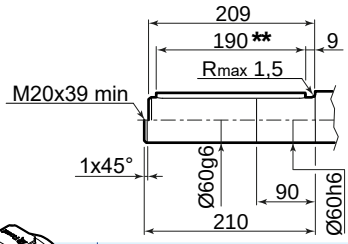

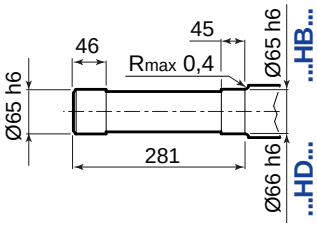

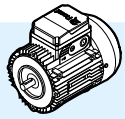

	63	71	80	90S [2]	90L	100	112	132S [3]	132M
AC	123	138	156	176	176	194	218	257	257
AD	95	112	121	141	141	151	163	194	194
LB	199	225	254	276	306	339	377	433	493
LBZ	254	287	323	355	385	434	476	541	601
L [1]	586	612	641	663	693	726	764	820	880
LZ [1]	641	674	710	742	772	821	863	928	988
LD	103	103	103	136	136	136	136	190	190
R	86	86	86	106	106	106	106	148	148

153
74
208

[1] See also pages 80, 81.
[2] For motors HB3-HB3Z 90S 2, HB3-HB3Z 90S 4 dimensions as motor size 90L.
[3] For motors HB3-HB3Z 132 SB 2, HB3-HB3Z 132SC 2, HB3-HB3Z 132S 4 dimensions as motor size 132M

For details about drive end **A** and **B** see page 39.
* options on request.
** both version with key

12.7

iO 973 PE

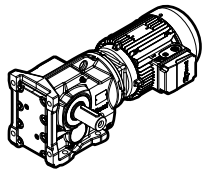

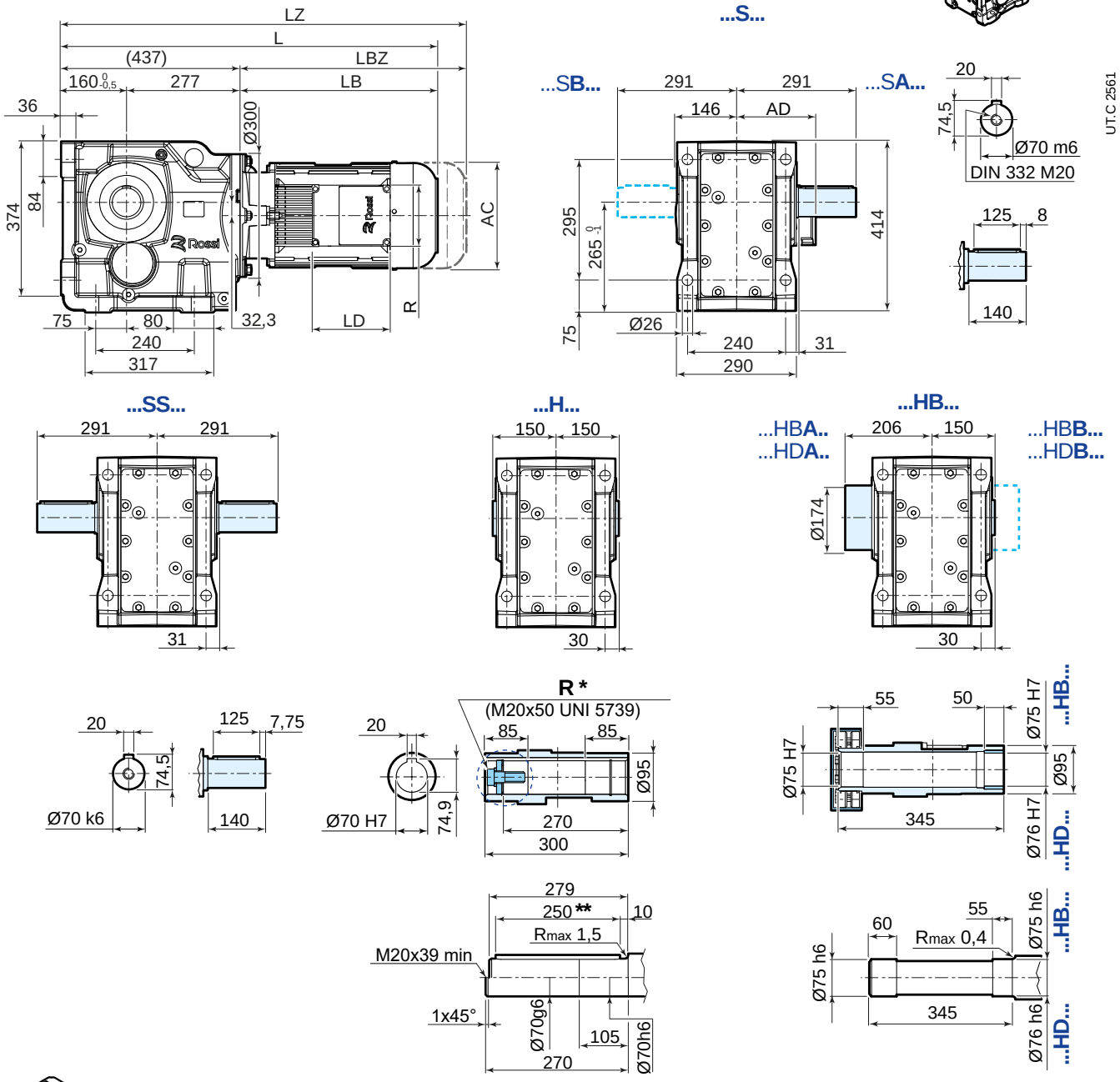

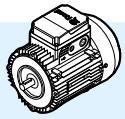

	63	71	80	90S [2]	90L	100	112	132S [3]	132M
AC	123	138	156	176	176	194	218	257	257
AD	95	112	121	141	141	151	163	194	194
LB	199	225	254	276	306	339	377	433	493
LBZ	254	287	323	355	385	434	476	541	601
L [1]	636	662	691	713	743	776	814	870	930
LZ [1]	691	724	760	792	822	871	913	978	1038
LD	103	103	103	136	136	136	136	190	190
R	86	86	86	106	106	106	106	148	148

153
74
208

[1] See also pages 80, 81.
[2] For motors HB3-HB3Z 90S 2, HB3-HB3Z 90S 4 dimensions as motor size 90L.
[3] For motors HB3-HB3Z 132 SB 2, HB3-HB3Z 132SC 2, HB3-HB3Z 132S 4 dimensions as motor size 132M

For details about drive end **A** and **B** see page 39.
* options on request.
** both version with key

iO 973 FE...F945

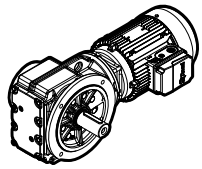

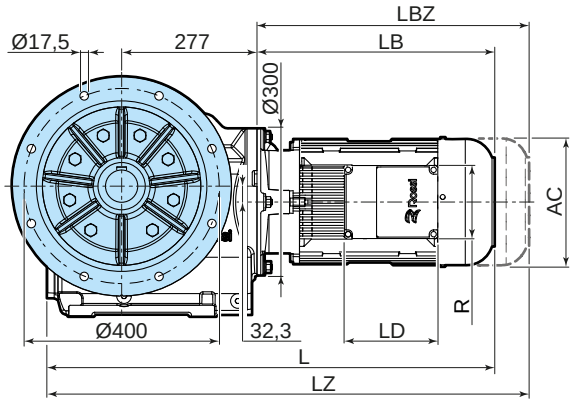

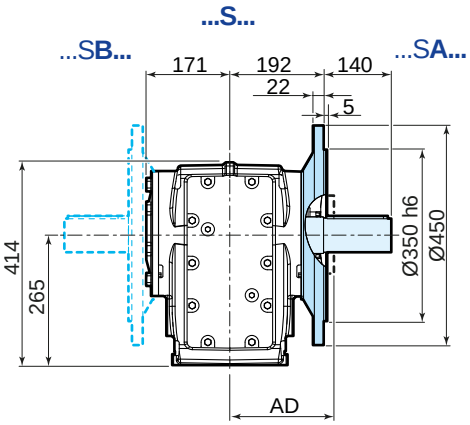

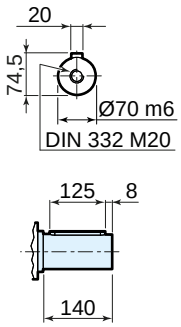

UT.C 2562

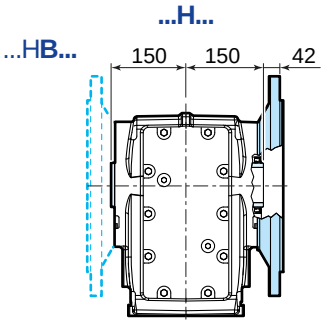

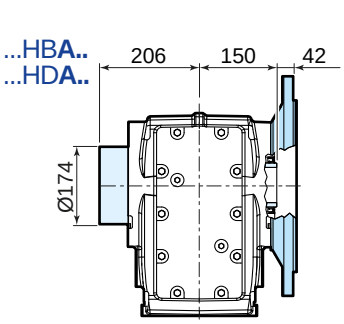

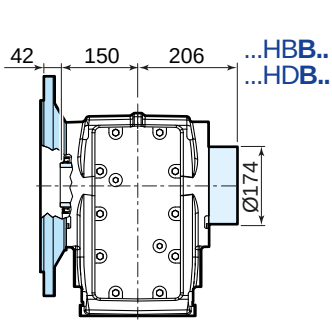

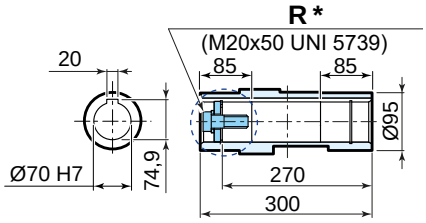

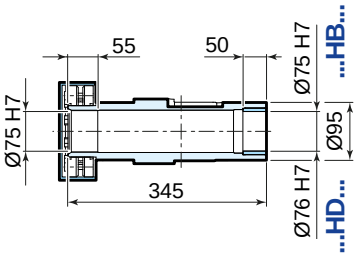

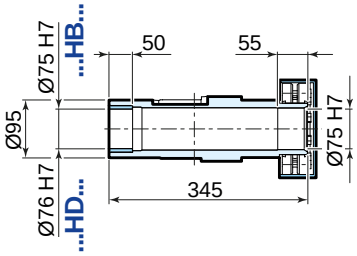

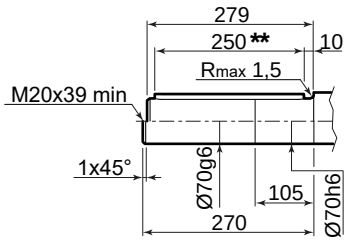

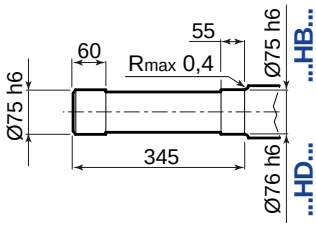

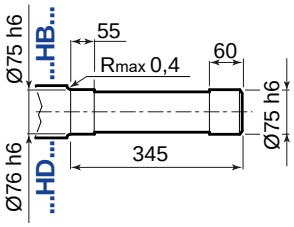

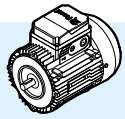

	63	71	80	90S [2]	90L	100	112	132S [3]	132M
AC	123	138	156	176	176	194	218	257	257
AD	95	112	121	141	141	151	163	194	194
LB	199	225	254	276	306	339	377	433	493
LBZ	254	287	323	355	385	434	476	541	601
L [1]	629	655	684	706	736	769	807	863	923
LZ [1]	684	717	753	785	815	864	906	971	1031
LD	103	103	103	136	136	136	136	190	190
R	86	86	86	106	106	106	106	148	148

153
74
208

[1] See also pages 80, 81.
[2] For motors HB3-HB3Z 90S 2, HB3-HB3Z 90S 4 dimensions as motor size 90L.
[3] For motors HB3-HB3Z 132 SB 2, HB3-HB3Z 132SC 2, HB3-HB3Z 132S 4 dimensions as motor size 132M

For details about drive end **A** and **B** see page 39.
* options on request.
** both version with key

iO 973 SE

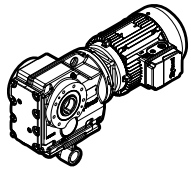

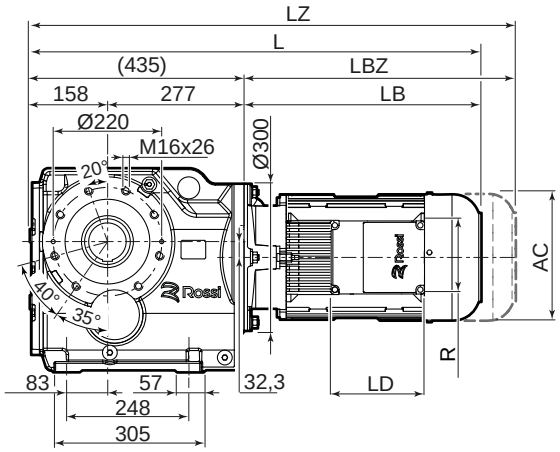

...H...

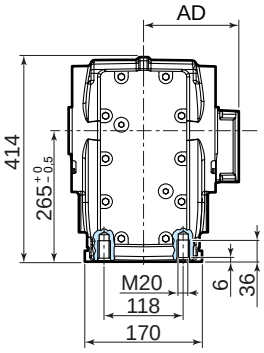

TA *

Arm mountable towards A side or towards B side

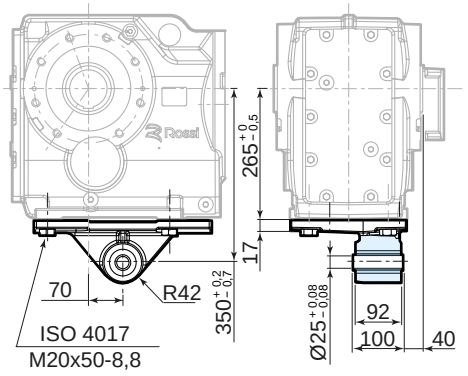

...H...

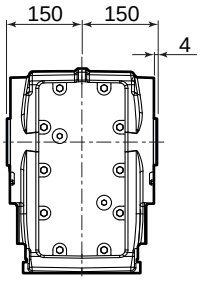

...HB...

...HB**A**..
...HD**A**..

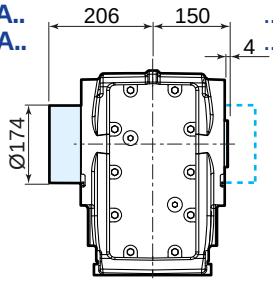

...HB**B**...
...HD**B**...

UT.C 2563

R *

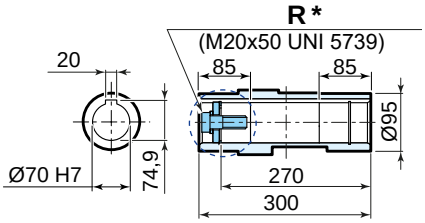

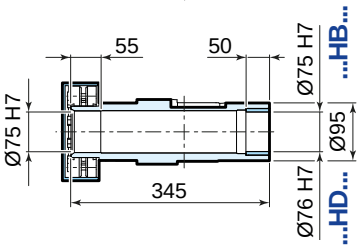

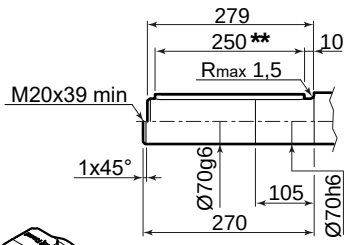

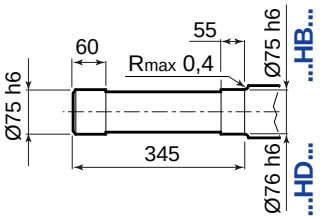

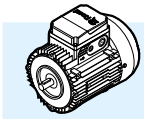

	63	71	80	90S [2]	90L	100	112	132S [3]	132M
AC	123	138	156	176	176	194	218	257	257
AD	95	112	121	141	141	151	163	194	194
LB	199	225	254	276	306	339	377	433	493
LBZ	254	287	323	355	385	434	476	541	601
L [1]	634	660	689	711	741	774	812	868	928
LZ [1]	689	722	758	790	820	869	911	976	1036
LD	103	103	103	136	136	136	136	190	190
R	86	86	86	106	106	106	106	148	148

153
74
208

[1] See also pages 80, 81.
[2] For motors HB3-HB3Z 90S 2, HB3-HB3Z 90S 4 dimensions as motor size 90L.
[3] For motors HB3-HB3Z 132 SB 2, HB3-HB3Z 132SC 2, HB3-HB3Z 132S 4 dimensions as motor size 132M

For details about drive end **A** and **B** see page 39.
* options on request.
** both version with key

page intentionally left blank

13

Compact three-phase motor HB and brake motor HBZ

Section contents

13.1	Compact asynchronous three-phase motor HB	210
13.1.1	General specifications	210
13.2	Technical data of compact asynchronous three-phase motor HB	212
13.3	Compact asynchronous three-phase brake motor HBZ	215
13.3.1	General specifications	215
13.3.2	Brake specifications	217
13.4	Technical data of compact asynchronous three-phase brake motor HBZ	219

13.1

Compact asynchronous three-phase motor HB

13.1.1 General specifications

- **insulation class F**, rise temperature B;
- **mating tolerances under «accuracy» rating;**
- **IP55 protection;**
- **suitable for operation with inverter;**
- asynchronous three-phase **electric motor** with rotor cage, total enclosed, externally ventilated (cooling system IC 411 with cooling fan keyed on motor shaft);
- **single-speed** 2, 4 or 6 poles **motor**;
- particularly strong **construction** (both electrical and mechanical); duly proportioned bearings;
- **«generous» electromagnetic sizing** having margins of safety, good acceleration capacity (high frequency of starting) and uniform starting (slightly «sagged» characteristic curves);
- **metallic terminal box;**
- **designs available** for every application need (independent cooling fan, independent cooling fan and encoder, protections higher than IP 55, etc.)

Standard

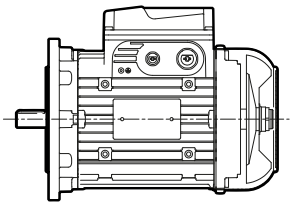

Encoder

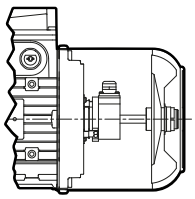

Independent cooling fan

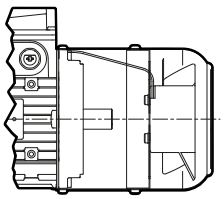

Independent cooling fan and encoder

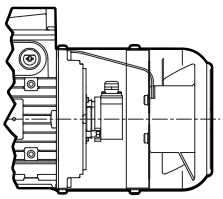

UT.C 1374

Rated power delivered on continuous duty (S1) and referred to nominal voltage and frequency, ambient temperature -15 ÷ 40 °C and maximum altitude 1000 m.
Motor housing in pressure diecast light alloy.
Drive end and non-drive end end-shield in cast iron or light alloy.
«Supported» tightening attachments of **endshields and flanges** fitted on housing with «tight» coupling.
Ball bearings lubricated «for life» assuming pollution-free surroundings; preload spring.
Motor shaft axially fastened on drive end.
Rear threaded extraction hole as standard for sizes ≥ 90 ... 132.
Steel **fan cover**.
Thermoplastic **cooling fan** with radial vanes.
Terminal box made of light alloy (integral with housing with knockout cable openings on both sides, two holes, one for power cable and one for auxiliary equipment).
Left side position non drive end (pos. TB0 see page 40); on request other positions.
Pressure diecast light alloy **terminal box cover**.
Terminal block with 6 terminals (9 terminals for supply voltage YY230 Y460 60 Hz).
Earth terminal located inside terminal box; prearranged for the installation of further two external earth terminals on housing.

Rotor: pressure diecast cage rotor in aluminium.
Stator winding with class H copper conductor insulation, insulated with double coat, type of impregnation with resin of class H; other materials are of classes F and H for a class F insulation system.
Materials and type of impregnation allow use in tropical climates without further treatments.
Rotor dynamic balancing: vibration velocity under standard rating A. Motors are balanced with half key inserted into shaft extension.
Painting with bi-component water-based acrylic enamel, color blue RAL 5010 DIN 1843, suitable to resist to normal industrial environments (corrosivity class C3 ISO 12944-2).

For non-standard designs and accessories see page 41.

13.2

Technical data of compact asynchronous three-phase motor HB

2 poles - 3000 min^{-1}
IP 55
IC 411
Insulation class F
Temperature rise class B

IE3
400 V - 50Hz
ErP

P_N kW	Motor	n_N min^{-1}	M_N N m	I_N A 400 V	cos φ	η IE3 IEC 60034-2-1 100%	75%	50%	M_S / M_N	M_{max} / M_N	I_S / I_N	J_0 kg m^2	z_0 start/h	kg
1,1	**HB3 80 B 2**	2875	3,7	2,3	0,84	82,7	83,2	81	3,9	3,9	7,7	0,0013	2500	11,6
1,5	**HB3 90 S 2**	2890	4,97	2,9	0,88	84,2	84,5	83,3	3,3	3,6	7,9	0,0019	1800	16
2,2	**HB3 90 LA 2**	2890	7,3	4,4	0,85	85,9	86,2	85,1	3,9	4,4	8,4	0,0023	1600	18
3	**HB3 100 LA 2**	2930	9,8	6,2	0,80	87,1	87,2	85,2	4,2	5,1	10,1	0,0044	1500	24
4	**HB3 112 M 2**	2940	13	7,6	0,87	88,1	88,2	86,7	2,8	4,2	9,8	0,0074	1400	33
5,5	**HB3 132 S 2**	2960	17,8	10,4	0,85	89,2	88,6	85,6	5,2	6,1	12,7	0,0174	710	53
7,5	**HB3 132 SB 2**	2960	24,3	14	0,85	90,1	89,9	87,3	5,7	6,5	13,6	0,0215	710	61,5

4 poles - 1500 min^{-1}
IP 55
IC 411
Insulation class F
Temperature rise class B

IE2
400 V - 50Hz
ErP

P_N kW	Motor			n_N min^{-1}	M_N N m	I_N A 400 V	cos φ	η IE2 IEC 60034-2-1 100%	75%	50%	M_S / M_N	M_{max} / M_N	I_S / I_N	J_0 kg m^2	z_0 start/h	kg
0,12	**HB2**	**63 A**	**4**	1370	0,84	0,52	0,61	55	52,2	48,5	2,2	2,5	2,7	0,0002	12500	3,9
0,18	**HB2**	**63 B**	**4**	1360	1,26	0,7	0,63	58,9	56,1	50	2,1	2,3	2,8	0,0003	12500	4,5
0,25	**HB2**	**71 A**	**4**	1400	1,71	0,8	0,68	66,7	66	60,4	2,2	2,5	3,6	0,0007	10000	5,7
0,37	**HB2**	**71 B**	**4**	1400	2,52	1,1	0,68	71,4	70,9	67,8	2,5	2,8	4	0,0009	10000	6,6
0,55	**HB2**	**80 A**	**4**	1405	3,74	1,38	0,78	73,8	74	70,1	2,5	3,58	4,9	0,0019	8000	7,6

4 poles - 1500 min^{-1}
IP 55
IC 411
Insulation class F
Temperature rise class B

IE3
400 V - 50Hz
ErP

P_N kW	Motor			n_N min^{-1}	M_N N m	I_N A 400 V	cos φ	η IE3 IEC 60034-2-1 100%	75%	50%	M_S / M_N	M_{max} / M_N	I_S / I_N	J_0 kg m^2	z_0 start/h	kg
0,75	**HB3**	**80 B**	**4**	1410	5,1	2	0,67	82,5	82,2	80,1	3,2	3,3	5,3	0,0018	6800	12
1,1	**HB3**	**90 S**	**4**	1420	7,4	2,4	0,80	84,1	84,8	83,6	3,0	3,5	6,4	0,0041	3150	18,5
1,5	**HB3**	**90 L**	**4**	1430	10,1	3,3	0,78	85,3	86,1	85	3,1	3,7	6,7	0,0043	3000	19
2,2	**HB3**	**100 LA**	**4**	1440	14,6	4,8	0,76	86,7	87,2	85,5	3,5	4,4	7,4	0,0076	3000	26
3 (1)	**HB3**	**112 MA**	**4**	1450	19,8	6,1	0,80	88,7	88,6	87,3	3,5	4,4	8,8	0,013	2000	33
4	**HB3**	**112 M**	**4**	1450	26,3	8,5	0,77	88,6	89,2	88	3,7	4,6	9,0	0,014	1800	35
5,5	**HB3**	**132 S**	**4**	1470	35,8	12	0,74	89,6	89,5	87,6	4,5	5,0	9,1	0,0357	900	58
7,5	**HB3**	**132 M**	**4**	1460	49	15,2	0,79	90,4	90,4	89,6	3,9	4,2	8,4	0,0432	900	66
9,2 (1)	**HB3**	**132 MB**	**4**	1460	60,2	19,2	0,76	91	90,8	90,1	4,0	4,1	8,5	0,0448	800	68,5

(1) Power not according to standard for the relevant motor size

6 poles - 1000 min^{-1}
IP 55
IC 411
Insulation class F
Temperature rise class B

IE2
400 V - 50Hz
ErP

P_N kW	Motor			n_N min^{-1}	M_N N m	I_N A 400 V	cos φ	η IE2 IEC 60034-2-1 100%	75%	50%	M_S / M_N	M_{max} / M_N	I_S / I_N	J_0 kg m^2	z_0 start/h	kg
0,12	**HB2**	**63 B**	**6**	910	1,26	0,57	0,57	53,7	49,5	41,1	2,7	2,8	2,5	0,0005	12500	4,5
0,18	**HB2**	**71 A**	**6**	910	1,89	0,62	0,68	61,6	59,8	51,9	2,4	2,5	3,2	0,0009	12500	6
0,25	**HB2**	**71 B**	**6**	900	2,65	0,85	0,68	62,4	60,7	54	2,5	2,6	3,2	0,0012	11200	6,8
0,37	**HB2**	**80 A**	**6**	930	3,8	1,2	0,67	66,8	65,4	58,4	2,5	2,6	3,6	0,0019	9500	8
0,55	**HB2**	**80 B**	**6**	920	5,7	1,68	0,68	69,8	69,7	64,9	2,5	2,6	3,7	0,0025	9000	9,6

6 poles - 1000 min^{-1}
IP 55
IC 411
Insulation class F
Temperature rise class B

IE3
400 V - 50Hz
ErP

P_N kW	Motor			n_N min^{-1}	M_N N m	I_N A 400 V	cos φ	η IE3 IEC 60034-2-1 100%	75%	50%	M_S / M_N	M_{max} / M_N	I_S / I_N	J_0 kg m^2	z_0 start/h	kg
0,75	**HB3**	**90 S**	**6**	930	7,7	2	0,72	78,9	76	73	2,1	2,9	4,9	0,0056	6000	15,5
1,1	**HB3**	**90 L**	**6**	930	11,3	2,8	0,72	81	79	77	2,6	3	5,1	0,0071	5600	19,5
1,5	**HB3**	**100 LA**	**6**	950	15,1	3,5	0,75	82,5	82,4	80,4	2,5	3,4	6,5	0,013	3000	26
2,2	**HB3**	**112 M**	**6**	960	21,9	5,1	0,73	84,3	85	83,2	2,3	3,5	6,9	0,0202	2800	33
3	**HB3**	**132 S**	**6**	970	29,5	6,9	0,72	85,6	88	86,3	2,4	3,8	7,6	0,0435	1400	54

13.3.1 General specifications

- **Insulation class F**, rise temperature B;
- **mating tolerances under «accuracy» rating;**
- **IP55 protection;**
- **suitable for operation with inverter;**
- **electric asynchronous three-phase brake motor with d.c. brake** (braking in case of supply failure) with **double braking surface with braking torque proportioned to motor torque** (usually $M_f \approx 2\ M_N$);
- **single-speed** 2, 4 or 6, poles **motor**;
- **particularly strong construction** (both electrical and mechanical) to withstand alternating torsional and thermic stresses of starting and braking; duly proportioned bearings;
- **electromagnetic sizing especially studied** to allow high acceleration capacity (high frequency of starting) and uniform starting;
- **large metal terminal box**, multivoltage rectifier, one brake coil, for **voltage always coordinated** with the motor one (both Δ and Y);
- **maximum reduced noise level and operation progressivity** (both at starting and braking) thanks to a lower rapidity (typical of d.c. brake) of the anchor (which is lighter and less quick in the impact): motor starts slightly braked i.e. with greater progressivity; good release and braking rapidity; possibility to increase rapidity in braking, with supply opening on d.c. side;
- **high braking capacity;**
- **designs available** for every application need (independent cooling fan, independent cooling fan and encoder, protections higher than IP 55, etc.);
- **particularly suitable** for applications requiring **regular and low-noise starting and braking** and, at the same time, braking with good rapidity and precision and high number of starts.

Standard

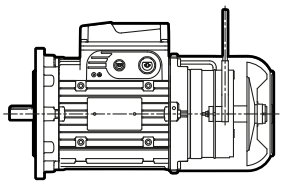

Encoder

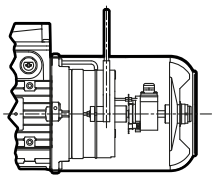

Independent cooling units

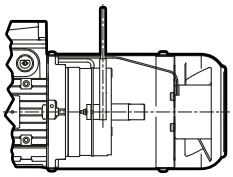

Independent cooling fan and encoder

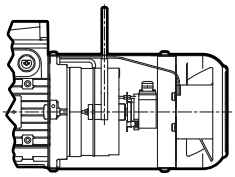

UT.C 1383

«Torque-speed» **characteristic curves** duly optimized for handling (horizontal and vertical traverse movements, rotation), slightly «sagged», without peaks in the hipersynchronous area and with carefully proportioned mean value.
Rated power delivered on continuous duty (S1) and referred to nominal voltage and frequency, ambient temperature -15 ÷ +40 °C and maximum altitude 1 000 m.
Housing in pressure diecast light alloy.
Drive end flange and non-drive end endshield in cast iron or light alloy.
«Supported» tightening attachments of **endshields and flanges** fitted on housing with «tight» coupling.
Ball bearings lubricated «for life» assuming pollution-free surroundings; preload spring.
Motor shaft in steel axially fastened on drive end endshield.
Rear threaded extraction **hole.**
Steel **fan cover**.
Thermoplastic **cooling fan** with radial vanes.

Terminal box made of light alloy (integral with housing with knockout cable openings on both sides, two holes, one for power cable and one for auxiliary equipment). Left side position non drive end (pos. TB0 see page 40); on request other positions. Pressure diecast light alloy **terminal box cover**.
Terminal block with 6 terminals (9 terminals for supply voltage YY230 Y460 60 Hz).
Earth terminal located inside terminal box; prearranged for the installation of further two external earth terminals on housing.
Brake supply: with rectifier laying in terminal box having 2 terminals for cable connection for rectifier supply, 2 for rapid braking external contact; possible brake supply **directly from motor terminal block** or **separately** (to use for: motors supplied by inverter, separate drive needs of motor and brake, etc.). Brake can be supplied, also at motor standstill, with no time limitations.
Rotor: pressure diecast cage rotor in aluminium.
Stator winding with class H copper conductor insulation, insulated with double coat, type of impregnation with resin of class H; other materials are of classes F and H for a class F insulation system.
Rotor **dynamic balancing**: vibration velocity under standard rating A. Motors are balanced with half key inserted into shaft extension.
Painting with two-component water based acrylic enamel, color blue RAL 5010 DIN 1843, suitable for normal industrial environments (corrosivity class C3 ISO 12944-2)

For **non-standard designs** and accessories see page 41.

13.3.2 Brake specifications

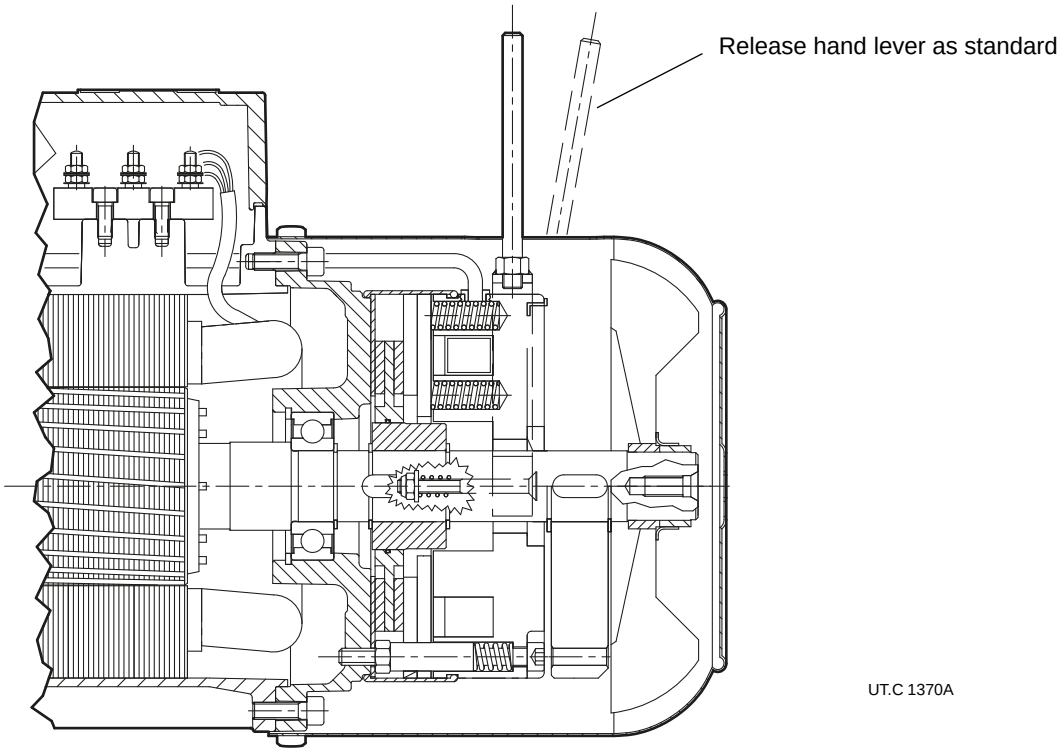

Electromagnetic spring loaded brake (braking occurs automatically when it is not supplied), with **d.c.** toroidal coil and double braking surface, braking torque proportioned to motor torque (usually $M_f \approx 2\ M_N$).
Maximum reduced noise level and operation progressivity (both at starting and braking thanks to a lower rapidity, typical of d.c. brake, of the anchor, which is lighter and less quick in the impact: motor starts slightly braked i.e. with greater progressivity); **good release and braking rapidity**; possibility to increase rapidity, both in releasing (with rapid rectifier) and braking, with supply opening on d.c. side; high braking capacity.
Designs available for every application (encoder, independent cooling fan, independent cooling fan and encoder, second shaft end, etc.).

Particularly suitable for applications requiring regular and low-noise starting and braking and, at the same time, braking with good rapidity and precision and high number of starts.
When electromagnet is not supplied, the brake anchor pushed by springs, presses the brake disk on rear end-shield generating the braking torque on the same brake disk and consequentely on motor shaft it is keyed onto; by supplying the brake the electromagnet draws the brake anchor and releases brake disk and driving shaft.

Key features:

- **multivoltage rectifier** (as standard), specifically designed for the management of a **brake coil only** with supply voltage always coordinated with standard voltage of HBZ motor (Δ 230 Y400 V ± 5% 50 Hz and accordingly also Δ 277 Y480 V ± 5% 60 Hz); **other voltages** on request;
- **rectifier supply directly from motor terminal block** or indifferently from a separate line;
- **braking torque** adjustable by changing number of springs;
- **insulation class F**, temperature rise class B;
- **brake disk**, sliding on moving hub: with single steel coat and double friction surface with average friction coefficient for low wear;
- **brake anchor in two pieces** for greater rapidity of starting and reduced noise;
- **water-proof and dust-proof gaiter and V-ring** both to prevent polluting infiltrations from surroundings towards brake, and to avoid that wear dust of friction surface will be dispersed in the surroundings;
- **lever for manual release with automatic return (as standard)** and removable level rod; position of release lever corresponding to terminal box; on request, other possible positions. Contact Rossi S.p.A.;
- **for other running specifications** see following table.

For **non-standard designs** and accessories see page 41.

Motor is always **equipped with a high reliable rectifier** fixed on terminal box providing adequate connecting terminal (2 for rectifier supply directly from motor terminal block or separate; 2 for external contact of rapid braking).

Multivoltage rectifiers **RM1**[1] (supplied as standard for brakes 12 ... 14) and **RM2**[1] (supplied as standard for brakes 05 ... 07) are a.c./d.c. supply voltage devices with full-wave controlled bridge able to **supply output voltage value independently from input voltage.**

The DC brake is suitable for power supply

range 110 ÷ 440 V a.c. (for brake sizes 12 ÷ 15)
range 200 ÷ 440 V a.c. (for brake sizes 06S ... 07)

without having to change the coil and therefore is also always coordinated with both motor voltages.
In the supply range 200 ÷ 440 V a.c., the rectifier also has an integrated speed-up function (a higher voltage than the nominal voltage is supplied to the brake coil for approx. 400 ms at the start, allowing the brake to be released more quickly).
In addition, compared to a conventional rectifier, multi-voltage also offers the following advantages:

- greater constancy of the brake performance (the output voltage being at a constant predefined value independent of fluctuations in the supply voltage);
- lower brake holding voltage (75 V d.c.) in the released state (lower power consumption, less coil heating and shorter braking delay).

Both models of rectifiers (RM1, RM2) can be switched on and off either on the a.c. side (for maximum quiet operation), or on the a.c. and d.c. sides. (for faster braking), as they are equipped with varistors to protect the diodes, the electromagnet and the d.c. side opening contact.

Main functional brake specifications

Actual values may deviate slightly depending on the ambient temperature and humidity, the brake temperature and the wear condition of the friction linings.

Brake size	[2]	Motor size	M_f 2 springs N m	M_f 4 springs N m	M_f 6 springs N m	Absorption V a.c.	Absorption A a.c. max	Absorption W	Delay of release t_1 [4] ms	Delay of braking t_2 ms	Delay of braking t_2 [5] (d.c.) ms	Air-gap mm min	Air-gap mm max	W_1 [6] MJ/mm	C_{max} [7] mm	W_{max} [8] brakings/h 10	W_{max} [8] brakings/h 100	W_{max} [8] brakings/h 1000
BZ 12	RM1	63 71	1,75	3,5	-	110 ÷ 440	0,09	9	20	100	10	0,25	0,40	70	5	4500	1120	160
BZ 53,13	RM1	71 80	2,5	5	7,5	110 ÷ 440	0,14	12	32	120	10	0,25	0,40	90	5	5600	1400	200
BZ 04, 14	RM1	80 90	5	11	16	110 ÷ 440	0,20	16	45	150	10	0,30	0,45	125	5	7500	1900	265
BZ 05, 15	RM2	90 100 112	13	27	40	110 ÷ 440	0,26	24	63	220	15	0,30	0,45	160	5	10000	2500	355
BZ 06 S	RM2	112	25	50	75	200 ÷ 440	0,28	30	90	300	30	0,35	0,55	220	5	14000	3550	500
BZ 56	RM2	132 S	37	75	-	200 ÷ 440	0,28	50	90	224	20	0,35	0,55	224	4,5	14000	3550	500
BZ 06	RM2	132 S, M	50	100	-	200 ÷ 440	0,28	50	90	224	20	0,35	0,55	224	4,5	14000	3550	500
BZ 07	RM2	132 MB	50	100	150	200 ÷ 440	0,34	65	125	280	25	0,40	0,60	315	4,5	20000	5000	710

(1) The multivoltage rectifiers RM1 and RM2 are patented devices.
(2) Standard rectifier, supplied as standard; the rest time must be between 2.5 s ÷ 3.5 s. If necessary, please contact Rossi S.p.A.
(3) Values valid with M_{fmax}, mean air-gap, nominal value of supply voltage.
(4) Brake release time obtained with standard rectifier and, for RM1, with supply voltage 200 V c.a.
(5) Braking delay obtained with separate brake supply and disconnection on a.c. side of rectifier (t_2) or on a.c. and d.c. side. (t_2 *d.c*).
With direct supply from motor terminal block, the values of t_2 increase by approx. 2,5 times the ones stated in the table.
(6) Work of friction generating a brake disk wear of 1 mm. (minimum value for heavy application, real value is usually greater).
(7) Maximum brake disk wear.
(8) Maximum friction work for each braking.

Technical data of compact asynchronous three-phase brake motor HBZ

2 poles - 3000 min^{-1}
IP55
IC411
Insulation class F
Temperature rise class B

IE3
400 V - 50Hz
ErP

P_N kW	Motor	n_N min^{-1}	M_N N m	I_N A 400V	cos φ	η IE3 IEC 60034-2-1 100%	75%	50%	M_S / M_N	M_{max} / M_N	I_S / I_N	J_0 kg m^2	Brake	M_f N m	z_0 start/h	kg
1,1	**HB3Z 80 B 2**	2875	3,7	2,3	0,84	82,7	83,2	81	3,9	3,9	7,7	0,0015	BZ04	11	2500	15,5
1,5	**HB3Z 90 S 2**	2890	4,97	2,9	0,88	84,2	84,5	83,3	3,3	3,6	7,9	0,0021	BZ14	11	1800	20
2,2	**HB3Z 90 LA 2**	2890	7,3	4,4	0,85	85,9	86,2	85,1	3,9	4,4	8,4	0,0027	BZ05	27	1600	24
3	**HB3Z 100 LA 2**	2930	9,8	6,2	0,80	87,1	87,2	85,2	4,2	5,1	10,1	0,0048	BZ15	27	1500	30
4	**HB3Z 112 M 2**	2940	13	7,6	0,87	88,1	88,2	86,7	2,8	4,2	9,8	0,0078	BZ15	27	1400	39
5,5	**HB3Z 132 S 2**	2960	17,8	10,4	0,85	89,2	88,6	85,6	5,2	6,1	12,7	0,0184	BZ06	50	710	64
7,5	**HB3Z 132 SB 2**	2960	24,3	14	0,85	90,1	89,9	87,3	5,7	6,5	13,6	0,0225	BZ06	50	710	72,5

4 poles - 1500 min^{-1}
IP55
IC411
Insulation class F
Temperature rise class B

IE2
400 V - 50Hz
ErP

P_N kW	Motor	n_N min^{-1}	M_N N m	I_N A 400V	cos φ	η IE2 IEC 60034-2-1 100%	75%	50%	M_S / M_N	M_{max} / M_N	I_S / I_N	J_0 kg m^2	Brake	M_f N m	z_0 start/h	kg
0,12	**HB2Z 63 A 4**	1370	0,84	0,52	0,61	55	52,2	48,5	2,2	2,5	2,7	0,0003	BZ12	1,75	12500	5,7
0,18	**HB2Z 63 B 4**	1360	1,26	0,7	0,63	58,9	56,1	50	2,1	2,3	2,8	0,0004	BZ12	3,5	12500	6,3
0,25	**HB2Z 71 A 4**	1400	1,71	0,8	0,68	66,7	66	60,4	2,2	2,5	3,6	0,0008	BZ53	5	10000	8,4
0,37	**HB2Z 71 B 4**	1400	2,52	1,1	0,68	71,4	70,9	67,8	2,5	2,8	4	0,0010	BZ53	5	10000	9,3
0,55	**HB2Z 80 A 4**	1405	3,74	1,38	0,78	73,8	74	70,1	2,5	3,58	4,9	0,0019	BZ04	11	8000	11,5

4 poles - 1500 min^{-1}
IP55
IC411
Insulation class F
Temperature rise class B

IE3
400 V - 50Hz
ErP

P_N kW	Motor	n_N min^{-1}	M_N N m	I_N A 400V	cos φ	η IE3 IEC 60034-2-1 100%	75%	50%	M_S / M_N	M_{max} / M_N	I_S / I_N	J_0 kg m^2	Brake	M_f N m	z_0 start/h	kg
0,75	**HB3Z 80 B 4**	1410	5,1	2	0,67	82,5	82,2	80,1	3,2	3,3	5,3	0,0020	BZ04	11	6800	16
1,1 (1)	**HB3Z 90 S 4**	1420	7,4	2,4	0,80	84,1	84,8	83,6	3,0	3,5	6,4	0,0043	BZ14	16	3150	22,5
1,5 (1)	**HB3Z 90 L 4**	1430	10,1	3,3	0,78	85,3	86,1	85	3,1	3,7	6,7	0,0047	BZ05	27	3000	25
2,2 (1)	**HB3Z 100 LA 4**	1440	14,6	4,8	0,76	86,7	87,2	85,5	3,5	4,4	7,4	0,0080	BZ15	40	3000	32
3 (1)	**HB3Z 112 MA 4**	1450	19,8	6,1	0,80	88,7	88,6	87,3	3,5	4,4	8,8	0,0130	BZ15	40	2000	39
4	**HB3Z 112 M 4**	1450	26,3	8,5	0,77	88,6	89,2	88	3,7	4,6	9,0	0,0150	BZ06 S	75	1800	44
5,5	**HB3Z 132 S 4**	1470	35,8	12	0,74	89,6	89,5	87,6	4,5	5,0	9,1	0,0367	BZ56	75	900	69
7,5	**HB3Z 132 M 4**	1460	49	15,2	0,79	90,4	90,4	89,6	3,9	4,2	8,4	0,0442	BZ06	100	900	77
9,2 (1)	**HB3Z 132 MB 4**	1460	60,2	19,2	0,76	91	90,8	90,1	4,0	4,1	8,5	0,0470	BZ07	150	800	80,5

(1) Power not according to standard for the relevant motor size

6 poles - 1000 min^{-1}
IP55
IC411
Insulation class F
Temperature rise class B

IE2
400 V - 50Hz
ErP

P_N kW	Motor	n_N min^{-1}	M_N N m	I_N A 400V	cos φ	η IE2 IEC 60034-2-1 100%	75%	50%	M_S / M_N	M_{max} / M_N	I_S / I_N	J_0 kg m^2	Brake	M_f N m	z_0 start/h	kg
0,12	**HB2Z 63 B 6**	910	1,26	0,57	0,57	53,7	49,5	41,1	2,7	2,8	2,5	0,0005	BZ12	3,5	12500	6,3
0,18	**HB2Z 71 A 6**	910	1,89	0,62	0,68	61,6	59,8	51,9	2,4	2,5	3,2	0,0010	BZ53	5	11200	8,7
0,25	**HB2Z 71 B 6**	900	2,65	0,85	0,68	62,4	60,7	54	2,5	2,6	3,2	0,0013	BZ53	5	11200	9,5
0,37	**HB2Z 80 A 6**	930	3,8	1,2	0,67	66,8	65,4	58,4	2,5	2,6	3,6	0,0021	BZ04	11	9500	12
0,55	**HB2Z 80 B 6**	920	5,7	1,68	0,68	69,8	69,7	64,9	2,5	2,6	3,7	0,0027	BZ04	16	9000	13,5

6 poles - 1000 min^{-1}
IP55
IC411
Insulation class F
Temperature rise class B

IE3
400 V - 50Hz
ErP

P_N kW	Motor	n_N min^{-1}	M_N N m	I_N A 400V	cos φ	η IE3 IEC 60034-2-1 100%	75%	50%	M_S / M_N	M_{max} / M_N	I_S / I_N	J_0 kg m^2	Brake	M_f N m	z_0 start/h	kg
0,75	**HB3Z 90 S 6**	930	7,7	2	0,72	78,9	76	73	2,1	2,9	4,9	0,0057	BZ14	16	7100	19,5
1,1	**HB3Z 90 L 6**	930	11,3	2,8	0,72	81	79	77	2,6	3	5,1	0,0071	BZ05	27	5300	26
1,5	**HB3Z 100 LA 6**	950	15,1	3,5	0,75	82,5	82,4	80,4	2,5	3,4	6,5	0,0133	BZ15	40	3000	32
2,2	**HB3Z 112 M 6**	960	21,9	5,1	0,73	84,3	85	83,2	2,3	3,5	6,9	0,0211	BZ06S	50	2800	42
3	**HB3Z 132 S 6**	970	29,5	6,9	0,72	85,6	88	86,3	2,4	3,8	7,6	0,0445	BZ56	75	1400	65

14

Installation and maintenance

Section contents

14.1 Safety 224

14.2 Installation and maintenance 225

14.1

Safety

Important:
The gearmotors supplied by Rossi S.p.A. must be incorporated into machinery and **should not be commissioned before the machinery or system in which the components have been incorporated conforms to:**

- **Machinery directive 2006/42/EC and subsequent updatings; in particular, possible safety guards for shaft ends not being used and for eventually accessible fan cover passages (or other) are the Buyer's responsibility;**
- **«Electromagnetic compatibility (EMC)» 2004/108/EC and subsequent updatings.**

Attention!
It is recommended to pay attention to all instructions of present handbook, all existing safety laws and standards concerning correct installation. Whenever personal injury or property damage may occur, due to falling or projecting parts of gear reducer or of its parts, foresee adequate supplementary protection devices against loosening or breaking of the fastening screws.
If deviations from normal operation occur (temperature increase, vibrations, unusual noise, etc.) immediately switch off the machine.

Safety during installation
An incorrect installation, an improper use, the removing or disconnection of protection devices, the lack of inspections and maintenance, improper connections may cause severe personal injury or property damage.
Therefore the component must be moved, installed, commissioned, handled, controlled, serviced and re-paired **exclusively by responsible qualified personnel specifically instructed** and have the necessary experience to recognize any risks connected with present products avoiding any possible emergencies.

Gear reducers and gearmotors of present catalog are normally suitable for installations in industrial areas: additional protection measures, if necessary, must be adopted and assured by the personnel responsible for the installation.

Attention!
Motors in non-standard design or with constructive **variations** may differ in the details from the ones described here following and may require additional information.

Attention!
For the installation, use and maintenance of the electric motor of the possible motor-variator and/or the electric supply device (frequency converter, soft-start, etc.), and/or any optional electric devices (e.g.: independent cooling fan, etc.), consult the specific attached documentation. If necessary, require it.

Safety during maintenance
When operating on gear reducer or on components connected to it, the **machine must be at rest, disconnected from power supply and cold**: disconnect motor (including auxiliary equipments) from power supply, gear reducer from load, be sure that safety systems are on against any accidental starting and, if necessary, pre-arrange mechanical locking devices (to be removed before commissioning).

Attention!
During the running the gear reducers could have **hot surfaces**; Always wait that the gear reducer or the gearmotor to cool before carrying out any operations. Further technical documentation (e.g. catalogs) can be downloaded from our website **www.rossi.com**.

Be sure that the structure on which gearmotor is fitted is plane, levelled and sufficiently dimensioned in order to assure fitting stability and vibration absence, keeping in mind all transmitted forces due to the masses, to the torque, to the radial and axial loads.

Position the gearmotor so as to allow a free passage of air for cooling both gear reducer and motor (especially at motor fan side).

Avoid: any obstruction to the air-flow; heat sources near the gearmotor that might affect the temperature of cooling-air and of gearmotor for radiation; insufficient air recycle or any other factor hindering the steady dissipation of heat.
Mount the gearmotor so as not to receive vibrations.

When external loads are present use pins or locking blocks, if necessary.

When fitting gear reducer and machine and/or gear reducer and eventual flange B5 it is recommended to use **locking adhesives** such as LOCTITE on the fastening screws (also on flange mating surfaces).
For outdoor installation or in a hostile environment protect the gearmotor with anticorrosion paint. Added protection may be afforded by water-repellent grease (especially around the rotary seating of seal rings and the accessible zones of shaft end).

Gearmotors should be protected wherever possible, and by whatever appropriate means, from solar radiation and extremes of weather; weather protection **becomes essential** when the low or high speed shafts or when motor is vertical with fan on the top.

For ambient temperatures higher than 40 °C or lower than 0 °C, contact Rossi S.p.A.

Before wiring-up the gearmotor, make sure that motor voltage corresponds to input voltage.
If direction of rotation is not as desired, invert two phases at the terminals.

If overloads are imposed for long periods or if shocks or danger of jamming are envisaged, then motor-protection, electronic torque limiters, fluid couplings, safety couplings, control units or other similar devices should be fitted.
Where duty cycles involve a high number of starts on-load, it is advisable to utilize **thermal probes** (fitted on the wiring) for motor protection; a thermal overload relay is unsuitable since its threshold must be set higher than the motor's nominal current rating.

Use varistors to limit voltage peaks due to contactors.

Attention!
Bearing life and good shaft and coupling running depend on alignment precision between the shafts.
Carefully align the gearmotor with the driven machine (with the aid of shims if need be), interposing flexible couplings whenever possible.
Whenever a leakage of lubricant could cause heavy damages, increase the frequency of inspections and/or envisage appropriate control devices (e.g.: remote oil level gauge, lubricant for food industry, etc.).

In polluting surroundings, take suitable precautions against lubricant contamination through seal rings or other.

For brake or non-standard motors, consult us for specific information.

Fitting of components to low speed shaft ends
It is recommended that the bore of parts keyed to low speed shaft ends is machined to K7 tolerance (H7 when load is uniform and light).
Before mounting, thoroughly clean mating surfaces and lubricate against seizure and fretting corrosion. Installing and removal operations should be carried out with pullers and jacking screws using the tapped hole at the shaft butt-end.

Machine pivot
For the machine pivot the gear reducer hollow shaft is to be keyed onto we recommend the dimensions stated on page 12.

Gear selection data sheet

1 Application conditions

Application / Industry sector

Type of machine to be driven

- ☐ new machine
- ☐ existing machine, running gear reducer currently applied

Ambient temperature [°C]

min	standard	max

Altitude [m above sea level]

Environment:

- ☐ normal (industrial) indoor
- ☐ normal (industrial) outdoor
- ☐ dusty
- ☐ corrosive / humid

Gear reducer position:

- ☐ small environment with limited air movement (v_{air} < 0,63 m/s)
- ☐ wide environment with free air movement (v_{air} > 1,25 m/s)
- ☐ open space, protected against extremes of weather and solar radiance

2 Load data

Required output speed [min^{-1}]

min	nominal	max

Torque required at low speed shaft [N m]

min	nominal	max

Required output power [kW]

min	nominal	max

Input speed (gear reducers) [min^{-1}]

min	nominal	max

Nature of load:

- ☐ uniform
- ☐ moderate overloads
- ☐ heavy overloads

Frequency of starting [starts/h]

Machine moment of inertia [kg m^2]

min	standard	max

Running time [h/d]

Total duration [h]

Duty cycle (S1 ... S10)

Load cycle attached

- ☐ yes
- ☐ no

3 Motor

Motor type:

- ☐ asynchronous three-phase (a.c.)
- ☐ asynchronous three-phase with inverter
- ☐ d.c. motor with relevant converter
- ☐ internal combustion motor (single-cylinder)
- ☐ internal combustion motor (multi-cylinder)

Power P_1 [kW]

min	nominal	max

Nominal speed n_1 [min^{-1}]

min	nominal	max

a.c. motor supply:

voltage [V]	frequency [Hz]

IEC motor size (a.c. motor)

Type of a.c. motor starting:

- ☐ direct
- ☐ Y / Δ
- ☐ soft starter / inverter

Electromagnetic motor

- ☐ parking brake
- ☐ work
- ☐ safety

Braking torque [N m]

Starting torque [N m]

Moment of inertia [kg m^2]

Electric motor design (a.c. and d.c.):

- ☐ with independent cooling fan
- ☐ with encoder:
- ☐ with tacho-generator

System of motor-gear reducer mounting:

- ☐ with coupling
- ☐ with trapezoidal belts

section	No.	d_m [mm]	d_1 [mm]

- ☐ with toothed belt drive

section	No.	d_m [mm]

Eventual limit to drive dimensions

4 Gear reducer

Mounting position

Direction of rotation of output shaft

- ☐ white arrow
- ☐ black arrow
- ☐ white and black arrow

Backstop device (if present)

- ☐ free rotation, white arrow
- ☐ free rotation, black arrow

Type of admitted cooling

- ☐ with fan
- ☐ with coil
- ☐ with internal exchanger
- ☐ with UR O/A unit
- ☐ with UR O/W unit

Type of machine coupling

- ☐ shaft mounting
- ☐ with fluid / flexible coupling
- ☐ with cardan joint
- ☐ with toothed belt drive

pitch	d_m	d_1	ϕ

- ☐ with chain

pitch	No.	z_2	z_3	overhang [mm]	ϕ

- ☐ straight tooth cylindrical gear

pitch	No.	z_2	z_3	overhang [mm]	ϕ

Eventual axial load F_a [N]

Eventual limit to drive dimensions

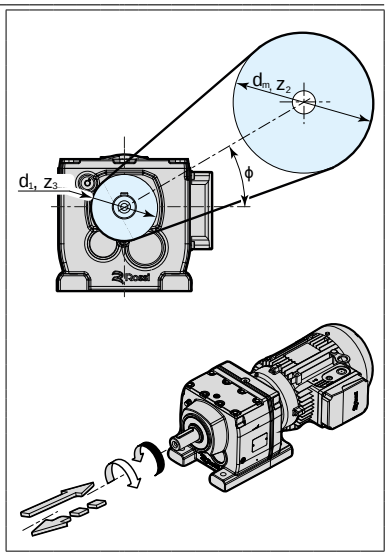

Frame size	With Technical System units	With SI units
starting or stopping **time** as a function of an acceleration or deceleration, of a starting or braking torque	$t = \frac{v}{a}$ [s] $t = \frac{Gd^2 \cdot n}{375 \cdot M}$ [s]	$t = \frac{J \cdot \omega}{M}$ [s]
velocity in rotary motion	$v = \frac{\pi \cdot d \cdot n}{60} = \frac{d \cdot n}{19{,}1}$ [m/s]	$v = \omega \cdot r$ [m/s]
angular velocity	$n = \frac{60 \cdot v}{\pi \cdot d} = \frac{19{,}1 \cdot v}{d}$ [min^{-1}]	$\omega = \frac{v}{r}$ [rad/s]
acceleration or deceleration as a function of starting or stopping time	$a = \frac{v}{t}$ [m/s^2]	
angular **acceleration** or **deceleration** as a function of a starting or stopping time, of a starting or braking torque	$\alpha = \frac{n}{9{,}55 \cdot t}$ [rad/s^2] $\alpha = \frac{39{,}2 \cdot M}{Gd^2}$ [rad/s^2]	$\alpha = \frac{\omega}{t}$ [rad/s^2] $\alpha = \frac{M}{J}$ [rad/s^2]
starting or stopping distance as a function of an **acceleration** or deceleration, of a final or initial velocity	$s = \frac{a \cdot t^2}{2}$ [m] $s = \frac{v \cdot t}{2}$ [m] $w = \frac{\alpha \cdot t^2}{2}$ [rad]	
starting or stopping **angle** as a function of an angular acceleration or deceleration, of a final or initial angular velocity	$\varphi = \frac{n \cdot t}{19{,}1}$ [rad]	$\varphi = \frac{\omega \cdot t}{2}$ [rad]
mass	$m = \frac{G}{g}$ $[\frac{kgf\ s^2}{m}]$	m è l'unità di massa [kg]
weight (weight force)	G è l'unità di peso (forza peso) [kgf]	$G = m \cdot g$ [N]
force in vertical (lifting), horizontal, inclined motion of translation (μ = coefficient of friction; φ = angle of inclination)	$F = G$ [kgf] $F = \mu \cdot G$ [kgf] $F = G\ (\mu \cdot \cos\varphi + \text{sen}\ \varphi)$ [kgf]	$F = m \cdot g$ [N] $F = \mu \cdot m \cdot g$ [N] $F = m \cdot g\ (\mu \cdot \cos\varphi + \text{sen}\ \varphi)$ [N]
dynamic moment Gd², moment of inertia J due to a motion of translation (numerically $J = \frac{Gd^2}{4}$)	$Gd^2 = \frac{365 \cdot G \cdot v^2}{n^2}$ [kgf m^2]	$J = \frac{m \cdot v^2}{\omega^2}$ [kg m^2]
torque as a function of a force, of a dynamic moment or of a moment of inertia, of a power	$M = \frac{F \cdot d}{2}$ [kgf m] $M = \frac{Gd^2 \cdot n}{375 \cdot t}$ [kgf m] $M = \frac{716 \cdot P}{n}$ [kgf m]	$M = F \cdot r$ [N m] $M = \frac{J \cdot \omega}{t}$ [N m] $M = \frac{P}{\omega}$ [N m]
work, energy in motion of translation, in rotary motion	$W = \frac{G \cdot v^2}{19{,}6}$ [kgf m] $W = \frac{Gd^2 \cdot n^2}{7160}$ [kgf m]	$W = \frac{m \cdot v^2}{2}$ [J] $W = \frac{J \cdot \omega^2}{2}$ [J]
power in motion of translation, in rotary motion	$P = \frac{F \cdot v}{75}$ [CV] $P = \frac{M \cdot n}{716}$ [CV]	$P = F \cdot v$ [W] $P = M \cdot \omega$ [W]
power available at the shaft of a single-phase motor ($\cos\varphi$ = power factor)	$P = \frac{U \cdot I \cdot \eta \cdot \cos\varphi}{736}$ [CV]	$P = U \cdot I \cdot \eta \cdot \cos\varphi$ [W]
power available at the shaft of a three-phase motor	$P = \frac{U \cdot I \cdot \eta \cdot \cos\varphi}{425}$ [CV]	$P = 1{,}73 \cdot U \cdot I \cdot \eta \cdot \cos\varphi$ [W]

Note. Acceleration or deceleration are understood constant; motion of translation and rotary motion are understood rectilinear and circular respectively.

Notes

Solutions for
an evolving
industry

Rossi S.p.A.
Via Emilia Ovest 915/A
41123 Modena - Italy

info@rossi.com
www.rossi.com

2635.CAT.iFIT-iC-iO-23.03-0-EN

© Rossi S.p.A. Rossi reserves the right to make any modification whenever to this publication contents. The information given in this document only contains general descriptions and/or performance features which may not always specifically reflect those described.

The Customer is responsible for the correct selection and application of product in view of its industrial and/or commercial needs, unless the use has been recommended by technical qualified personnel of Rossi, who were duly informed about Customer's application purposes. In this case all the necessary data required for the selection shall be communicated exactly and in writing by the Customer, stated in the order and confirmed by Rossi. The Customer is always responsible for the safety of product applications. Every care has been taken in the drawing up of the catalog to ensure the accuracy of the information contained in this publication, however Rossi can accept no responsibility for any errors, omissions or outdated data. Due to the constant evolution of the state of the art, Rossi reserves the right to make any modification whenever to this publication contents. The responsibility for the product selection is of the Customer, excluding different agreements duly legalized in writing and undersigned by the Parties.